ozti PROFESSIONAL SOLUTION PARTNER

CATERING EQUIPMENT

ozti PROFESSIONAL SOLUTION PARTNER

OUR MANAGEMENT SYSTEM CERTIFICATES

K - Q TSE-ISO-EN 9000	C-E TSE-ISO-EN 14000	IRIS™ Certification	Food Safety Management System ASB ISO 22000:2018
QUALITY MANAGEMENT SYSTEM	ENVIRONMENTAL MANAGEMENT SYSTEM	INTERNATIONAL RAILWAY INDUSTRY STANDARD	FOOD SAFETY MANAGEMENT SYSTEM

OUR QUALITY CERTIFICATES

TSE	EAC	CE	ETL Intertek		CE-1783
TURKEY PRODUCT CERTIFICATE	RUSSIA PRODUCT CERTIFICATE	ELECTRICAL APPLIANCES PRODUCT CERTIFICATE	USA GAS AND ELECTRICAL APPLIANCES PRODUCT CERTIFICATE	UKRAINE PRODUCT CERTIFICATE	GAS APPLIANCES PRODUCT CERTIFICATE
RoHS	TSEK	SASO QUALITY MARK	CQC	TÜV-CB	GS
THE RESTRICTION OF HAZARDOUS SUBTANCES DIRECTIVE (WEEE)	TURKEY PRODUCT CERTIFICATE	SAUDI STANDARDS METROLOGY AND QUALITY	CHINA QUALITY CERTIFICATION CENTER	TEST CERTIFICATES FOR ELECTRICAL EQUIPMENT	TUV RHEINLAND PRODUCT SAFETY

ALREADY IN 5 CONTINENTS OVER 100 COUNTRIES

With more than 4500 different kind of high quality professional kitchen appliances and equipment ranging from preparation to cooking equipments, carrying to display units and from hot-cold lines to working benches and dishwashers, Oztiryakiler has been offering turnkey solutions and complete commercial kitchen design services since 1958. With 140.000 m2 production area equipped with latest technology, 1300 employees and more than 2000 internationally acknowledged product & product group certifications, we design, we produce and we install.

900 SERIES

Ranges	08
Boiling Tops	09
Wok Burner	09
Solid Tops	10
Induction Cooker	10
Infrared Ceramic Cooker	10
Grills	11
Chargrills	12
Fryers	12
Pasta Cookers	13
Chip Scuttle	13
Bains Marie	13
Boiling Pans	14
Bratt Pans	16
External Boiling Pan	16
Worktops	17
Base Cupboards	17

700 SERIES

Ranges	22
Boiling Tops	22
Ceramic Cookers	24
Solid Tops	24
Induction Cookers	24
Wok Burners	25
Grills	26
Chargrills	27
Fryers	27
Pasta Cookers	28
Chip Scuttle	28
Bains Marie	28
Boiling Pans	29
Bratt Pans	29
Worktops	30

600 SERIES

Electric Ranges	34
Gas Boiling Tops	34
Wok Burners	34
Chargrill	35
Grills	35
Fryers	35
Pasta Cooker	36
Electric Chip Scuttle	36
Bain Marie	36
Worktops	37
Base Cupboards	37

OVENS

Combi Oven & Convection Oven	40
Baking Oven	50
Prover Cabinet	52
Coal Stove Oven	53
Charcoal Grill	54
Charcoal Grill With Hood	54
Large Oven	55
Pizza Oven	55

OTHER COOKING EQUIPMENT

Ranges	58
Over BenchCookers	58
Fryers	59
Floor Type Cookers	59
Bread Slicer Machine	60
Conveyor Toaster	60
Grill Toaster	61
Waffle Machines	61
Salamanders	62
Crepe Machine	62
Soup Bain Maries	63
Knife Sterilizers	63
Doner Grill Machines	65
Marine Kitchen Equipment	70

COLD UNITS

S-Series Refrigerators	84
S-Series Freezers	86
K-Series Refrigerators	88
K-Series Refrigerators	90
Slim Type Refrigerator & Freezer	92
700 Serie Counter Type Refrigerators	94
700 Serie CounterType Freezers	96
600 Serie Counter Type Refrigerators	98
600 Serie Counter Type Freezers	99
700 Serie Counter Type Refrigerator with Basin	100
Counter Type Refrigerator Pizza or Salad Unit	101
Counter Type Refrigerator with Sink Unit	101
Under Counter Type Refrigerator	102
Under Counter Type Freezers	103
Cold Rooms	104

BANQUET TROLLEYS

Electric Ranges	110
Gas Boiling Tops	112
Wok Burners	113
Chargrill	113

DISHWASHERS

35x35 - 40x40 Glasswasher	116
50x50 Dishwasher	120
Hood Type Dıshwasher	128
Conveyor Type Dishwasher	132
Flight Type Dishwasher	134
Pot & Utensil Washer	136
Vegetable Washing Machine	137
Salad and Vegetable Dryer	137

PREPARATIONS MACHINES

Dough Kneading Machines	142
Planet Mixer (FC)	142
Planet Mixers	143
Planet Mixers Mechanical	143
Potato Peelers	145
Potato Peelers With Filter	145
Potato Peelers With Filter	146
Filter for Patato Peelers	146
Potato Chipper	146
Garlic Peelers	147
Onion Peelers	147
Bowl Cutter Mixers	147
Vertical Cutter Mixers	149

KITCHEN AND SERVICE

Plate Dispensers	154
Salad Bar	155
Display Units	157
Built-in Self Service Display Unit	164
Sneeze Guards	168
Mobile Bain - Maries	170
Trolleys	171
Flour and Sugar Trolleys	175
Dry Product Trolley	175
Garbage Container	175
Waste Bins	176

SERVING COUNTERS

Serving Counter	180
Wooden Decorated Serving Counter	181
Cutlery Counter	183
Shelf Options	183

SINK UNITS

Hand Washing Sink	188
Sink Bowls	190
Sink Tops	192
Sink Units	194
Bar and Coctail Station	205
Inlet-Outlet Tables for Dishwashing	207
Scrapping Tables	208
Working Benches	209
Wall Mounted Cupboard and Shelves	214
Storage Shelf	216
Hoods	217
Floor Drains	221

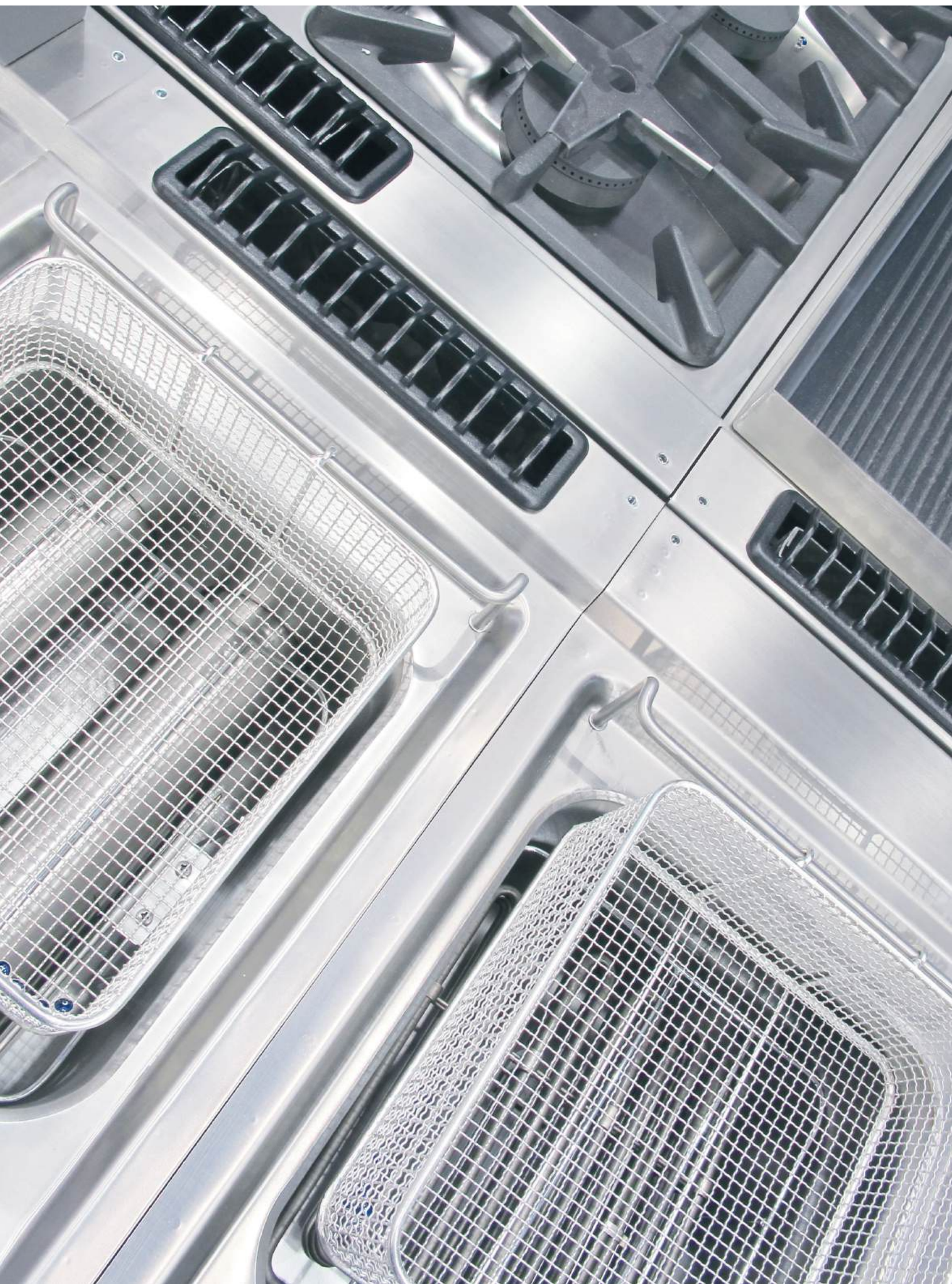

900 SERIE

08
Ranges

09
Boiling Tops
Wok Burner

10
Solid Tops
Induction Cooker
Infrared Ceramic Cooker

11
Grills

12
Chargrills
Lavastone Grills
Chip Scuttle

13
Fryers
Pasta Cookers
Bains Marie

14
Boiling Pans

16
Bratt Pans
External Boiling Pan

17
Worktops
Base Cupboards

ozti 900 SERIES

Ranges

EAC UAT 081 CE-1783

7865.N1.80908.10 | **7865.N1.12908.10**

2 MM MONOBLOCK COOKTOP | 40 MM INSULATION DOOR | NEW GENERATION BRASS BURNERS | 3 LEVEL CHROME COATED REMOVABLE RACK | FLAME FAILURE SAFETY

Micro perforated stainless steel gas burners designed to increase efficiency and provide rapid heating.	Pilot light on each burner for best performance and significant reduction in energy-consumption.
Gas oven with piezo spark ignition	Semi gloss, acid resistant and machine washable cast iron pan stand.
Thermostatic temperature control between 100-300°C	Deep drawn door and chamber front support for closure without gasket and better hygiene with ergonomic and strong door handle.

	CODE	L	W	H	BURNER		CABINET	OVEN	OVEN DIMENSION	OVEN POWER	BURNER POWER	TOTAL POWER	VOLTAGE
	7865.N1.80908.10	800	900	850		4	-		GN-2/1	8 kW	2 x 6 + 2 x 10 kW	40 kW	-
	7865.N1.80908.10P	800	900	850		4	-		GN-2/1	8 kW	4 x 10 kW	48 kW	-
	7865.N1.12908.10	1200	900	850		6	✓		GN-2/1	8 kW	3 x 6 + 3 x 10 kW	56 kW	-
	7865.N1.12908.10 P	1200	900	850		6	✓		GN-2/1	8 kW	6 x 10 kW	68 kW	-
	7865.N1.12908.50	1200	900	850		6	-		1060x550x275mm	13 kW	3 x 6 + 3 x 10 kW	61 kW	-
	7865.N1.80908.10E	800	900	850		4	-		GN-2/1	6 kW	2 x 6 + 2 x 10 kW	32 kW	400 V 3 NPE 50/60 Hz
	7865.N1.80908.10PE	800	900	850		4	-		GN-2/1	6 kW	4 x 10 kW	40 kW	400 V 3 NPE 50/60 Hz
	7865.N1.12908.10E	1200	900	850		6	✓		GN-2/1	6 kW	3 x 6 + 3 x 10 kW	48 kW	400 V 3 NPE 50/60 Hz
	7865.N1.12908.50E	1200	900	850		6	-		1060x550x275mm	9 kW	3 x 6 + 3 x 10 kW	48 kW	400 V 3 NPE 50/60 Hz
	7865.N1.12908.50P	1200	900	850		6	-		1060x550x275mm	13 kW	6 x 10 kW	73 kW	-
	7865.N1.80908.11	800	900	850		4	-		GN-2/1	6 kW	-	22 kW	400 V 3 NPE 50/60 Hz
	7865.N1.12908.11	1200	900	850		6	✓		GN-2/1	6 kW	-	30 kW	400 V 3 NPE 50/60 Hz
	7865.N1.12908.51	1200	900	850		6	-		1060x550x275mm	9 kW	-	33 kW	400 V 3 NPE 50/60 Hz

Boiling Tops

7865.N1.40903.20

Electric Boiling Tops

7865.N1.12903.21

2 MM MONOBLOCK COOKTOP

NEW GENERATION BRASS BURNERS

FLAME FAILURE SAFETY

	CODE	BURNER		L	W	H	BURNER POWER	TOTAL POWER	VOLTAGE
	7865.N1.40903.20		2	400	900	280	6 + 10 kW	16 kW	-
	7865.N1.80903.20		4	800	900	280	2 x 6 + 2 x 10 kW	32 kW	-
	7865.N1.80903.20P		4	800	900	280	4 x 10 kW	40 kW	-
	7865.N1.12903.20		6	1200	900	280	3 x 6 + 3 x 10 kW	48 kW	-
	7865.N1.12903.20P		6	1200	900	280	6 x 10 kW	60 kW	-
	7865.N1.40903.21		2	400	900	280	2x4 kW	8 kW	400 V 3 NPE 50/60 Hz
	7865.N1.80903.21		4	800	900	280	4x4 kW	16 kW	400 V 3 NPE 50/60 Hz
	7865.N1.12903.21		6	1200	900	280	6x4 kW	24 kW	400 V 3 NPE 50/60 Hz

Wok Burners

2 MM MONOBLOCK COOKTOP

FLAME FAILURE SAFETY

High power cast iron burners	Removable cooking ring ensures easier cleaning on the top
Durable and strong cast iron cooking ring designed to meet heavy load	Removable drip tray under the burners for easy cleaning

	CODE	BURNER		L	W	H	POWER
	7865.N1.40903.WK		1	400	900	280	14 kW
	7865.N1.80903.WK		2	800	900	280	28 kW

7865.N1.40903.WK

ozti 900 SERIES

Solid Tops

22 MM DURABLE CASTIRON COOKING SURFACE

FLAME FAILURE SAFETY

Differentiated thermal zones: Maximum temperature of 500°C for boiling at the center, decreasing to 200°C outwards for simmering

Single ring cast iron central burner for optimized combustion with pilot light and flame failure safety device

Piezo ignition

Removable cooking surface divided into four segments for easy cleaning and maintenance

Insulated combustion chamber under the cooking plate with insulation between the panels

Cooking plate placed on woven ceramic fibre support to avoid transmission of heat directly to the work top

	CODE	BURNER	L	W	H	POWER
	7865.N1.40903.22		400	900	280	6 kW
	7865.N1.80903.22		800	900	280	10 kW

7865.N1.80903.22

Induction Cookers

2 MM STAINLESS STEEL WORK TOP

OVERHEATING SAFETY DEVICE

Glass ceramic cooking surface with independently controlled 2 or 4 heating zones of 3,5kW power

Almost the entire surface of the ceramic plate can be used without 'dead' spots

Pan detection device: Heating activated only when the pan is in direct contact with the surface; automatic interruption when the pan is removed from the top;

Precise control of the cooking temperature with self-regulated heating zone according to the pan diameter

Maximum efficiency, less heat dissipation to the kitchen environment

	CODE	BURNER	L	W	H	VOLTAGE	POWER
	7865.N1.40903.IS		400	900	280	230 V / NPE 50/60 Hz	7 kW
	7865.N1.80903.IS		800	900	280	400V / 3 NPE 50 / 60 Hz	14 kW

7865.N1.80903.IS

Infrared Ceramic Cookers

2 MM STAINLESS STEEL WORK TOP

6 MM CERAMIC GLASS TOP COOKING SURFACE

Heating circuit in circular zones with a diameter of 210-300 mm

Sealed cooking top to prevent leakage and infiltration inside unit

Warning light to indicate residual surface heat for safety

Immediate heat transfer from cooking ceramic top to pan

Maximum efficiency, less heat dissipation to the kitchen environment

Easy to clean smooth cooking top

	CODE	BURNER	L	W	H	VOLTAGE	POWER
	7865.N1.40903.CS		400	900	280	400V / 3 NPE 50/60 Hz	6 kW
	7865.N1.80903.CS		800	900	280	400V / 3 NPE 50/60 Hz	12 kW

7865.N1.80903.CS

Grills

EAC UAT 081 CE-1783

2 MM STAINLESS STEEL WORK TOP

FLAME FAILURE SAFETY

- Designed for high productivity, outstanding performance and even heat distribution
- Independently controlled cooking zones for economy during quiet periods
- "Satin finish" or "hard chrome coated" 15 mm thick mild steel plate contained in a watertight recess for more efficient cooking
- Large drain hole on cooking surface for ease of operation and cleaning
- Large fat collection drawer with a capacity of 1.5 liter for uninterrupted cooking
- Removable stainless steel high splash guards on the rear and sides of cooking surface for operational comfort
- Rapid heat up with stainless steel burners
- Thermostatic temperature control between 100-300°C
- Piezzo spark ignition
- Choice of cooking surface: Smooth, half ribbed or fully ribbed versions are available
- Hard chrome coated mirror finished option for ease of cleaning, reduced heat radiation and scratch resistance

7864.N1.80903.19

	CODE		L	W	H	VOLTAGE	TEMPERATURE	SURFACE		POWER
	7864.N1.40903.06		400	900	280	-	100-300 °C		Carbon Steel	9 kW
	7864.N1.40903.06C		400	900	280	-	100-300 °C		Chrome	9 kW
	7864.N1.40903.03		400	900	280	-	100-300 °C		Carbon Steel	9 kW
	7864.N1.40903.03C		400	900	280	-	100-300 °C		Chrome	9 kW
	7864.N1.80903.16		800	900	280	-	100-300 °C		Carbon Steel	18 kW
	7864.N1.80903.16C		800	900	280	-	100-300 °C		Chrome	18 kW
	7864.N1.80903.19		800	900	280	-	100-300 °C		Carbon Steel	18 kW
	7864.N1.80903.19C		800	900	280	-	100-300 °C		Chrome	18 kW
	7864.N1.80903.13		800	900	280	-	100-300 °C		Carbon Steel	18 kW
	7864.N1.80903.13C		800	900	280	-	100-300 °C		Chrome	18 kW
	7864.N1.40903.04		400	900	280	400V/3 NPE 50/60 Hz	50-300 °C		Carbon Steel	6 kW
	7864.N1.40903.04C		400	900	280	400V/3 NPE 50/60 Hz	50-300 °C		Chrome	6 kW
	7864.N1.40903.01		400	900	280	400V/3 NPE 50/60 Hz	50-300 °C		Carbon Steel	6 kW
	7864.N1.40903.01C		400	900	280	400V/3 NPE 50/60 Hz	50-300 °C		Chrome	6 kW
	7864.N1.80903.17		800	900	280	400V/3 NPE 50/60 Hz	50-300 °C		Carbon Steel	12 kW
	7864.N1.80903.17C		800	900	280	400V/3 NPE 50/60 Hz	50-300 °C		Chrome	12 kW
	7864.N1.80903.14		800	900	280	400V/3 NPE 50/60 Hz	50-300 °C		Carbon Steel	12 kW
	7864.N1.80903.14C		800	900	280	400V/3 NPE 50/60 Hz	50-300 °C		Chrome	12 kW
	7864.N1.80903.11		800	900	280	400V/3 NPE 50/60 Hz	50-300 °C		Carbon Steel	12 kW
	7864.N1.80903.11C		800	900	280	400V/3 NPE 50/60 Hz	50-300 °C		Chrome	12 kW

Chargrills

130 MM REVERSIBLE CAST IRON GRIDS

FLAME FAILURE SAFETY

- Independently controlled heat zones for maximum versatility
- Sturdy one piece stainless steel splash guard and removable cast iron grids for ease of cleaning
- Large fat collection drawer on the front side for uninterrupted cooking
- Heavy duty cast iron char radians and flame arrestor broiling grates on each burner
- 130mm wide reversible cast iron grids for self-cleaning and level broiling
- Pitched grease trough in each grate to provide fat run-off and controls flare-ups

	CODE	BURNER	L	W	H	POWER
	7864.N1.40903.72		400	900	280	8 kW
	7864.N1.80903.72		800	900	280	18 kW

7864.N1.80903.72

Lavastone Grills

FLAME FAILURE SAFETY

- Micro perforated stainless steel efficient burners optimize cooking experience
- Height adjustable and removable “V” shaped stainless steel grates channel the excess fat into fat collection drawer
- Independently controlled heat zones for maximum versatility
- Piezo spark ignition
- Large fat collection drawer on the front side for uninterrupted cooking and easy cleaning

	CODE	BURNER		L	W	H	POWER
	7864.N1.40903.12		1	400	900	280	10 kW
	7864.N1.80903.20		2	800	900	280	20 kW

7864.N1.80903.20

Electric Chip Scuttle

- 2 mm thick stainless steel work top
- Recommended for use in combination with a fryer to allow excess oil to drip in the basin
- Increased holding time with infrared heating element on the back side of the unit
- Perforated false bottom shaped for easy food collection.

	CODE	BURNER	L	W	H	VOLTAGE	POWER
	7831.N1.40903.01		400	900	280	230 V/NPE 50/60 Hz	1 kW

7831.N1.40903.01

Fryers

MONOBLOCK FRYER TANK

3,5 MIN COOKING TIME

- Durable stainless steel external panels
- AISI 304 stainless steel monoblock fryer tank with rounded corners for ease of cleaning and better hygiene
- Tank capacity of 22 liters
- Oil expansion recess incorporated in the top
- Continuous seal of the tank to the top by robotic welding
- Thermostatic regulation of oil temperature up to a maximum of 190°C
- Supplied with 2 half size basket per each tank
- Safety thermostat with manual reset
- Stainless steel burners and piezzo spark ignition on gas models
- Armored heating elements with low power density ensures optimum service life for the oil
- Heating element can rotate by 90° for ease of cleaning on electric models
- Easy draining with wide bore drain pipe located under the tank
- Production capacity french fries for one basket 35 kg/hr

7856.N1.80908.14

	CODE		L	W	H	VOLTAGE	TEMPERATURE	CAPACITY	POWER
	7856.N1.40908.04		400	900	850	-	110-190 °C	22 lt	22 kW
	7856.N1.80908.14		800	900	850	-	110-190 °C	22 lt + 22 lt	44 kW
	7856.N1.40908.02		400	900	850	400V/3 NPE 50/60 Hz	60-190 °C	22 lt	18 kW
	7856.N1.80908.02		800	900	850	400V/3 NPE 50/60 Hz	60-190 °C	22 lt + 22 lt	36 kW

Pasta Cookers

2 MM MONOBLOCK COOKTOP

40 LITER WATER BASIN CAPACITY

- AISI 316 stainless steel deep drawn water basin with rounded corners for ease of cleaning and better hygiene
- Continuous seal of the water basin to the top by robotic welding
- Starch removal to keep water fresh for longer and to ensure perfect results
- Drainage surface is provided on which baskets can be placed for draining
- Manual water refilling
- Easy and fast draining with manual ball-valve
- Micro perforated stainless steel burners with flame failure device on gas models
- Pilot light can be visually controlled through heat resistant ceramic glass
- High efficient armored heating elements located inside the tank for rapid heat up on electric models.

7858.N1.40908.11

	CODE		L	W	H	VOLTAGE	CAPACITY	POWER
	7858.N1.40908.23		400	900	850	-	40 lt.	18 kW
	7858.N1.80908.23		800	900	850	-	40 lt + 40 lt	36 kW
	7858.N1.40908.11		400	900	850	400V/3 NPE 50/60 Hz	40 lt.	12 kW
	7858.N1.80908.11		800	900	850	400V/3 NPE 50/60 Hz	40 lt + 40 lt	24 kW

Bain Maries

2 MM MONOBLOCK COOKTOP

COMPATIBLE GN 2/3

Used for keeping cooked food at serving temperatures using hot water
Manual water filling
Robust front mounted tap for easy drainage
Thermostatic regulation of water up to a maximum of 90°C with safety thermostat on electric models
Silicone heating elements with thermal cutout positioned under the base of water basin
Stainless steel burner located under the water basin for efficient and rapid heating on gas models

	CODE		L	W	H	VOLTAGE	TEMP.	POWER
	7854.N1.40903.13		400	900	280	-	-	2 kW
	7854.N1.80903.13		800	900	280	-	-	4 kW
	7854.N1.40903.11		400	900	280	230V/NPE 50/60 Hz	30-90 °C	1 kW
	7854.N1.80903.11		800	900	280	230V/NPE 50/60 Hz	30-90 °C	2 kW

7854.N1.80903.11

GN containers are ordered seperately

Boiling Pans

Safety lock system to prevent tilting if the lid is opened
Gas, electric and external steam models
Easy tilt mechanism with a control board
Energy saving and homogeneous heat distribution with indirect cooking
Kettle made of corrosion proof stainless steel
Manual lid opening
2" chrome-plated draining valve with large athermic handle
Safety valve with manometer to avoid overpressure of the steam in the jacket
External valve to evacuate manually excess air accumulated in the jacket during heating phase.
Flame control system on gas models
Casters for greater mobility.

7855.500LG.01

	CODE		CAPACITY	POWER	MOTOR POWER	DISCHARGE VALVE (Ø)	WEIGHT	GAS INLET CON. (Ø)	WATER INLET CON. (Ø)
	7855.100LG.01		100 lt.	22 kW	0,25 kW	2"	230 kg.	3/4"	3/4"
	7855.150LE.02		150 lt.	18 kW	0,25 kW	2"	245 kg.	-	3/4"
	7855.150LG.01		150 lt.	22 kW	0,25 kW	2"	250 kg.	3/4"	3/4"
	7855.200LE.02		200 lt.	27 kW	0,25 kW	2"	275 kg.	-	3/4"
	7855.500LG.01		500 lt.	56 kW	0,25 kW	2"	400 kg.	3/4"	3/4"

2 mm thick deep drawn stainless steel work top	Indirect Boiling pans
External valve to evacuate manually excess air accumulated in the jacket during heating phase.	Uniformly heated in the base and side walls of the pan by integrally generated saturated steam at a temperature of 110°C and a pressure of 0,4 bar in the jacket.
Round or rectangular monoblock boiling pan suitable for cooking, sautéing and poaching	Safety valve with manometer to avoid overpressure of the steam
Double skin lid with counter balanced mechanism for easy opening	Direct or indirect heating systems
High quality thermal insulation of the pan for energy saving	Solenoid valve and chromed swivel tap on top to refill with hot and cold water
Energy regulation through a control knob	Electronic ignition system visually controlled by indicator lamp on the front of gas models
Micro perforated high performance stainless steel burners with flame failure device on gas models	Incoloy armored heating elements fitted inside the jacket cavity base with safety thermostat on electric models
2" chrome-plated draining valve with large athermic handle	

Boiling Pans

	CODE		L	W	H	VOLTAGE	CAPACITY	HEATING	POWER
	7855.00300.01		1100	1362	895	230 V/NPE 50/60 Hz	300 lt	Indirect	40 kW
	7855.00400.01		1100	1370	1020	230 V/NPE 50/60 Hz	400 lt	Indirect	45 kW
	7855.00500.01		1300	1596	967	230 V/NPE 50/60 Hz	500 lt	Indirect	56 kW
	7855.00300.02		1100	1235	896	400 V/3 NPE 50/60 Hz	300 lt	Indirect	27 kW
	7855.00400.02		1100	1235	1020	400 V/3 NPE 50/60 Hz	400 lt	Indirect	36 kW
	7855.00500.02		1300	1436	967	400 V/3 NPE 50/60 Hz	500 lt	Indirect	45 kW

7855.00300.02

	CODE		L	W	H	VOLTAGE	CAPACITY	HEATING	POWER
	7855.N1.80908.01		800	900	850	230 V/NPE 50/60 Hz	100 lt	Indirect	22 kW
	7855.N1.80908.02		800	900	850	230 V/NPE 50/60 Hz	150 lt	Indirect	22 kW
	7855.N1.10908.03		1000	900	850	230 V/NPE 50/60 Hz	250 lt	Indirect	33 kW
	7855.N1.80908.11		800	900	850	230 V/NPE 50/60 Hz	100 lt	Direct	22 kW
	7855.N1.80908.12		800	900	850	230 V/NPE 50/60 Hz	150 lt	Direct	22 kW
	7855.N1.10908.13		1000	900	850	230 V/NPE 50/60 Hz	250 lt	Direct	33 kW
	7855.N1.80908.04		800	900	850	400 V/3 NPE 50/60 Hz	100 lt	Indirect	18 kW
	7855.N1.80908.05		800	900	850	400 V/3 NPE 50/60 Hz	150 lt	Indirect	18 kW
	7855.N1.10908.07		1000	900	900	400 V/3 NPE 50/60 Hz	250 lt	Indirect	27 kW

7855.N1.80908.01

	CODE		L	W	H	VOLTAGE	CAPACITY	HEATING	POWER
	7855.N1.10118.13		1000	1100	850	230 V/NPE 50/60 Hz	250 lt	Direct	33 kW
	7855.N1.10118.03		1000	1100	850	230 V/NPE 50/60 Hz	250 lt	Indirect	33 kW
	7855.N1.10118.07		1000	1100	850	400 V/3 NPE 50/60 Hz	250 lt	Indirect	27 kW

7855.N1.10118.13

Bratt Pans

8 MM STAINLESS STEEL DYRABLE BOTTOM

FLAME FAILURE SAFETY

- Optional 10 mm thick duomat cooking surface with the combination of 2 different stainless steel for better thermal stability available on request
- Rounded corners for ease of cleaning
- Electronic ignition system visually controlled by indicator lamp on the front of gas models
- Safety system to cut off gas and heating if the pan is raised
- Safety thermostat to avoid overheating
- Thermostatic temperature control between 50-300°C on gas models and 50-300°C on electric models
- High quality thermal insulation for limited heat radiation and low energy consumption
- Double skin lid with counter balanced mechanism for easy opening
- Manual wheel-operated or optional electrically controlled tilt mechanism
- Chromed swivel tap on top to refill with hot or cold water.
- Even heat distribution with armored heating elements under the cooking surface on electric models

	CODE		L	W	H	CAPACITY	POWER	VOLTAGE
	7867.N1.80908.01		800	900	850	80 lt.	20 kW	230 V / NPE 50 / 60 Hz
	7867.N1.10908.02		1000	900	850	100 lt.	24 kW	230 V / NPE 50 / 60 Hz
	7867.N1.12908.03		1200	900	850	130 lt.	30 kW	230 V / NPE 50 / 60 Hz
	7867.N1.16908.14		1600	900	850	205 lt.	44 kW	400 V / 3 NPE 50 / 60 Hz
	7867.N1.80908.04		800	900	850	80 lt.	9 kW	400 V / 3 NPE 50 / 60 Hz
	7867.N1.10908.05		1000	900	850	100 lt.	12 kW	400 V / 3 NPE 50 / 60 Hz
	7867.N1.12908.06		1200	900	850	130 lt.	15 kW	400 V / 3 NPE 50 / 60 Hz
	7867.N1.16908.18		1600	900	850	205 lt.	21 kW	400 V / 3 NPE 50 / 60 Hz

7867.N1.80908.04

External Boiling Pan

- Stainless steel body
- Height adjustable legs
- Available in 200, 400 and 500 liters capacity
- Counter-balanced double skin stainless steel pressure lid with safety valve
- Silicone gasket with lid lock for a perfect seal
- Safety valve with manometer to avoid overpressure of the steam in the jacket
- Articulated spout on the worktop with for filling the boiling pan
- 2" chrome-plated draining valve with large athermic handle
- High quality thermal insulation of the pan for energy saving

7855.00500.00

	CODE		CAPACITY	STEAN CONSUPTION	DISCHARGE VALVE DIA.	MAXIMUM PRESSURE LEVEL	STEAM INLET CON.	STEAM OUTLETCON.	WATER INLET CON. (Ø)	DIMENSIONS
	7855.00500.00		500 l	90 kg./h	2"	40	1 ½"	3/4"	3/4"	1208 x 1020
	7855.00400.00		400 l	80 kg./h	2"	40	1 ½"	3/4"	3/4"	1005 x 1100
	7855.00200.00		200 l	60 kg./h	2"	40	1 ½"	3/4"	3/4"	-

Worktops

7911.N1.80903.00

2 mm thick stainless steel work top

Compatible with other 900 series appliances

Heavy duty internal frame

	CODE	L	W	H
	7911.N1.40903.00	400	900	280
	7911.N1.80903.00	800	900	280

Base Cupboards

7911.N1.80903.00

Open base cupboards with door option

Large base compartment for storage of pots, pans, etc.

Double skin doors with ergonomic handle and magnetic lock to provide maximum comfort and hygiene

	CODE		L	W	H
	7876.N1.40905.00	with door	400	791	570
	7876.N1.80905.00	with door	800	791	570
	7876.N1.12905.00	with door	1200	791	570
	7876.N1.40905.10	without door	400	743	570
	7876.N1.80905.10	without door	800	743	570
	7876.N1.12905.10	without door	1200	743	570

01	0339.02813.01

02	6260.00072.43

03	6260.00072.41

04	6260.00072.42

05	6019.00005.28

06	2864.N1.90802.IZ

07	2864.N1.90122.IZ

08	2864.N30.GR067.01

09	2864.Z20.01710054.A.65

10	2179.250.01830183.0.01

11	2864.Q3028.99

12	2865.N20.10940629.T.10

Accessories

	CODE	TYPE	APPLIANCE		TYPE	CODE	APPLIANCE
01	0339.02813.01	BASKET	PASTA COOKER	07	2864.N1.90122.IZ	BAR GRID	CHARGRILLS
02	6260.00072.43	BASKET	FRYER	08	2864.N30.GR067.01	GRILL CLEANING COMB	GRILLS
03	6260.00072.41	BASKET	FRYER	09	2864.Z20.01710054.A.65	GRILL CLEANING COMB	GRILLS
04	6260.00072.63	BASKET BASE	FRYER	10	2179.250.01830183.0.01	FLAME REDUCER	GAS RANGES
05	6019.00005.28	WIRE GRID	GAS RANGE	11	2864.N1.Q3028.99	GNITER MATCHES	GRILLS
06	2864.N1.90802.IZ	BAR GRID	CHARGRILLS	12	2865.N20.10940629.T.10	TRAY FOR OVEN	RANGES

PRODUCT CODE	PRODUCT DESCRIPTION	TYPE	L	W	H	Oven (kW)	kW	Kcal/h	BTU/h	G20 (m3/h)	G25 (m3/h)	G30 (kg/h)
7854.N1.40903.13	Bainmarie (gas)	Gas	400	900	280		2	1.720	6.824	0,21	0,25	0,16
7854.N1.80903.13	Bainmarie (gas)	Gas	800	900	280		4	3.440	13.648	0,42	0,49	0,31
7856.N1.40908.04	Fryer (gas)	Gas	400	900	850		22	18.920	75.064	2,33	2,71	1,72
7856.N1.80908.14	Fryer (gas)	Gas	800	900	850		44	37.840	150.128	4,66	5,41	3,43
7864.N1.80903.13C	Grill (gas) (groove) (chrom)	Gas	800	900	280		18	15.480	61.416	1,91	2,21	1,40
7864.N1.80903.16C	Grill (gas) (smooth) (chrom)	Gas	800	900	280		18	15.480	61.416	1,91	2,21	1,40
7864.N1.40903.03	Grill (gas) (groove)	Gas	400	900	280		9	7.740	30.708	0,95	1,11	0,70
7864.N1.40903.06	Grill (gas) (smooth)	Gas	400	900	280		9	7.740	30.708	0,95	1,11	0,70
7864.N1.40903.06C	Grill (gas) (smooth) (chrom)	Gas	400	900	280		9	7.740	30.708	0,95	1,11	0,70
7864.N1.40903.03C	Grill (gas) (groove) (chrom)	Gas	400	900	280		9	7.740	30.708	0,95	1,11	0,70
7864.N1.80903.19	Grill (gas) (half groove)	Gas	800	900	280		18	15.480	61.416	1,91	2,21	1,40
7864.N1.80903.13	Grill (gas) (groove)	Gas	800	900	280		18	15.480	61.416	1,91	2,21	1,40
7864.N1.80903.16	Grill (gas) (smooth)	Gas	800	900	280		18	15.480	61.416	1,91	2,21	1,40
7864.N1.80903.19C	Grill (gas) (half groove) (chrom)	Gas	800	900	280		18	15.480	61.416	1,91	2,21	1,40
7865.N1.12903.20	Boiling Tops (gas)	Gas	1200	900	280		48	41.280	163.776	5,09	5,90	3,74
7865.N1.40903.20	Cooker (gas)	Gas	400	900	280		16	13.760	54.592	1,70	1,97	1,25
7865.N1.80903.20P	Cooker (gas)	Gas	800	900	280		40	34.400	136.480	4,24	4,92	3,12
7865.N1.80903.20	Cooker (gas)	Gas	800	900	280		32	27.520	109.184	3,39	3,94	2,50
7865.N1.80908.10E	Range (gas cooker) (electrical oven)	Gas	800	900	850		32	27.520	109.184	3,39	3,94	2,50
7865.N1.80908.10PE	Range (gas cooker) (electrical oven)	Gas	800	900	850		40	34.400	136.480	4,24	4,92	3,12
7865.N1.12908.50E	Range (gas cooker) (electrical) (big oven)	Gas	1200	900	850		48	41.280	163.776	5,09	5,90	3,74
7865.N1.12908.50	Range (gas) (big oven)	Gas	1200	900	850	13	61	52.460	208.132	6,47	7,50	4,76
7865.N1.12908.10	Range (gas) (cupboard)	Gas	1200	900	850	8	56	48.160	191.072	5,94	6,89	4,37
7865.N1.80908.10P	Range (gas)	Gas	800	900	850	8	48	41.280	163.776	5,09	5,90	3,74
7865.N1.80908.10	Range (gas)	Gas	800	900	850	8	40	34.400	136.480	4,24	4,92	3,12
7855.N1.10908.13	Boiling pan (gas) (direct)	Gas	1000	900	850		33	28.380	112.596	3,50	4,06	2,57
7855.N1.80908.01	Boiling pan (gas) (indirect)	Gas	800	900	850		22	18.920	75.064	2,33	2,71	1,72
7855.N1.80908.02	Boiling pan (gas) (indirect)	Gas	800	900	850		22	18.920	75.064	2,33	2,71	1,72
7855.N1.10908.03	Boiling pan (gas) (indirect)	Gas	1000	900	850		33	28.380	112.596	3,50	4,06	2,57
7864.N1.12903.70	Chargrill (gas)	Gas	1200	900	280		40	34.400	136.480	4,24	4,92	3,12
7864.N1.80903.70	Chargrill (gas)	Gas	800	900	280		30	25.800	102.360	3,18	3,69	2,34
7858.N1.80908.23	Pasta cooker (gas)	Gas	800	900	850		36	30.960	122.832	3,82	4,43	2,81
7858.N1.40908.23	Pasta cooker (gas)	Gas	400	900	850		18	15.480	61.416	1,91	2,21	1,40
7855.N1.80908.11	Boiling pan (gas) (direct)	Gas	800	900	850		22	18.920	75.064	2,33	2,71	1,72
7855.N1.80908.12	Boiling pan (gas) (direct)	Gas	800	900	850		22	18.920	75.064	2,33	2,71	1,72
7865.N1.80903.WK	Wok burner (gas)	Gas	800	900	280		28	24.080	95.536	2,97	3,44	2,18
7865.N1.40903.WK	Wok burner (gas)	Gas	400	900	280		14	12.040	47.768	1,48	1,72	1,09
7865.N1.80903.53	Cooker (gas)	Gas	800	900	280		14	12.040	47.768	1,48	1,72	1,09
7865.N1.80903.22	Solid top (gas)	Gas	800	900	280		10	8.600	34.120	1,06	1,23	0,78
7865.N1.80908.12	Range (gas) (gas solid top)	Gas	800	900	850	8	18	15.480	61.416	1,91	2,21	1,40
7867.N1.80908.01	Tilting bratt pan (gas) (manuel)	Gas	800	900	850		20	17.200	68.240	2,12	2,46	1,56
7867.N1.10908.02	Tilting bratt pan (gas) (manuel)	Gas	1000	900	850		24	20.640	81.888	2,54	2,95	1,87
7867.N1.12908.03	Tilting bratt pan (gas) (manuel)	Gas	1200	900	850		30	25.800	102.360	3,18	3,69	2,34
7867.N1.16908.14	Tilting bratt pan (gas) (automatic)	Gas	1600	900	850		44	37.840	150.128	4,66	5,41	3,43

700 SERIE

22
Ranges
Boiling Tops

24
Ceramic Cookers
Solid Tops
Induction Cookers

25
Wok Burner

26
Grills

27
Chargrills
Fryers

28
Pasta Cookers
Chip Scuttle
Bains Marie

29
Boiling Pans
Bratt Pans

30
Worktops
Base Cupboards

Ranges

7865.N1.80708.10NL	7865.N1.80708.02

1.5 MM MONOBLOCK COOKTOP | 40 MM INSULATION DOOR | 3 LEVEL CHROME COATED REMOVABLE RACK | FLAME FAILURE SAFETY

Choice of 4 open burners combined with electric static oven or gas static oven with piezo spark ignition	Under-counter static oven:	
Ease of cleaning and extra strength with 1,5 mm laser cut deep drawn monoblock cooktop	—	Ergonomic and strong door handles
Cast iron hot plates hermetically sealed to one piece top	—	Micro perforated stainless steel gas burners designed to increase efficiency and provide rapid heating
Overheat protection by safety switch	—	Thermostatic temperature control between for gas model 100-300°C and Electrical model 50-300°C
Pilot light on each burner for best performance and significant reduction in energy-consumption	—	New design deep drawn door and chamber front support for closure without gasket and better hygiene
Chrome plated burners designed for maximum power, combustion and efficiency	—	4 burner gas range oven dimensions suitable for grid/pan 2/1GN
Temperature control between 90-450˚C by 6 position selector switch		

	CODE	L	W	H	BURNER		CABINET	OVEN	OVEN DIMENSION	OVEN POWER	BURNER POWER	TOTAL POWER	VOLTAGE
	7865.N1.80708.10NL	800	700	850		4	-		GN-2/1	7 kW	4 x 6 kW	31 kW	-
	7865.N1.80708.10NEL	800	700	850		4	-		GN-2/1	6 kW	4 x 6 kW	30 kW	400V / 3 NPE 50/60 Hz
	7865.N1.80708.10NLP	800	700	850		4	-		GN-2/1	7 kW	2x6+2x7.5 kW	34 kW	-
	7865.N1.80708.10NELP	800	700	850		4	✓		GN-2/1	6 kW	2x6+2x7.5 kW	33 kW	400V / 3 NPE 50/60 Hz
	7865.N1.80708.10NLS	800	700	850		4	-		GN-2/1	7 kW	4 x 7,5 kW	37 kW	-
	7865.N1.80708.10NELS	800	700	850		4	-		GN-2/1	6 kW	4 x 7,5 kW	36 kW	400V / 3 NPE 50/60 Hz
	7865.N1.80708.02	800	700	850		4	-		GN-2/1	6 kW	4 x 2,6 kW	16.4 kW	400 V 3 NPE 50/60 Hz
	7865.N1.12708.51	1200	700	850		6	-		GN-2/1	9 kW	6x2,6 kW	24,6 kW	400 V 3 NPE 50/60 Hz

Ranges

- 1,5 mm thick AISI 304 stainless steel laser cut top
- Flush top setting with secure fixing screws
- 3 installation options; standalone(fixed on a base w/ or w/o door), cantilever or on concrete plinth
- Installation gap behind the equipment for plumbing & electrical connections
- Easy access from front panel to all major components for maintenance
- Top, sides, back, front panels and control consoles in stainless steel with satin scotch-brite finish
- Standalone and base units are equipped with heavy duty 150 mm adjustable stainless feets.
- Chrome plated burners designed for maximum power, combustion and efficiency
- Burners are rated 6 kW with power regualtion from 2 to 6 max. power
- Each open burner equipped with flame failure device to make usage confortable and safety
- Each open burner has a pan support made from cast iron.
- Pilot light on each burner for best performance and significant reduction in energy-consumption
- Removable bulls eye for easy maintenance
- Central burner with optimized combustion, flame failure device and protected pilot light
- Heated by cast iron burner ensuring a rapid rise in the temperature of the bulls eye (over 500°C)
- Gas heated static oven with stainless steel micro perforated burners and self-stabilizing flame positioned beneath the base plate
- AISI 430 S/S, 2/1 GN capacity oven chamber with three height settings
- 40 mm thick oven door equipped with ergonomic and heavy duty handle
- Thermostatically controlled oven temperature between 100-300 °C
- Spring counterbalanced heavy duty door with integral hinges

7865.N1.12708.10NL

	CODE		OVEN TYPE	L	W	H	OVEN POWER	POWER GAS	TOTAL POWER
	7865.N1.12708.10NL			1200	700	850	7 kW	6x6 kW	43 kW
	7865.N1.12708.10NLP			1200	700	850	7 kW	3x6 kW+3x7,5 Kw	47,5 kW
	7865.N1.12708.10NLS			1200	700	850	7 kW	6x7,5 kW	52 kW
	7865.N1.12708.12NL			1200	700	850	7 kW	5x6 kW	37 kW
	7865.N1.12708.50NL			1200	700	850	13 kW	6x6 kW	49 kW
	7865.N1.12708.50NLP			1200	700	850	13 kW	3x6 kW+3x7,5 Kw	53,5 kW
	7865.N1.12708.50NLS			1200	700	850	13 kW	6x7,5 kW	58 kW

Boiling Tops

1,5MM MONOBLOCK COOKTOP

FLAME FAILURE SAFETY

	CODE		L	W	H	VOLTAGE	POWER
	7865.N1.40703.33NL		400	700	280	-	12 kW
	7865.N1.80703.35NL		800	700	280	-	24 kW
	7865.N1.40703.33NLP		400	700	280	-	13,5 kW
	7865.N1.80703.35NLP		800	700	280	-	27 kW
	7865.N1.40703.33NLS		400	700	280	-	15 kW
	7865.N1.80703.35NLS		800	700	280	-	30 kW
	7865.N1.40703.12		400	700	280	400V/3 NPE 50/60 Hz	5.2 kW
	7865.N1.80703.14		800	700	280	400V/3 NPE 50/60 Hz	10.4 kW

7865.N1.80703.35NL

Infrared Ceramic Cookers

1,5MM STAINLESS STEEL WORKTOP

6 MM CERAMIC GLASS TOP COOKING SURFACE

Heating circuit in circular zones with a diameter of 210-300 mm

Sealed cooking top to prevent leakage and infiltration inside unit

Warning light to indicate residual surface heat for safety

Immediate heat transfer from cooking ceramic top to pan

Maximum efficiency, less heat dissipation to the kitchen environment

Easy to clean smooth cooking top

	CODE	BURNER	L	W	H	VOLTAGE	POWER
	7865.N1.40703.CS		400	700	280	400V / 3 NPE 50/60 Hz	5 kW
	7865.N1.80703.CS		800	700	280	400V / 3 NPE 50/60 Hz	10 kW

7865.N1.80703.CS

Solid Tops

22 MM DURAIBLE CASTIRON COOKING SURFACE

FLAME FAILURE SAFETY

Differentiated thermal zones: Maximum temperature of 500°C for boiling at the center, decreasing to 200°C outwards for simmering

Single ring cast iron central burner for optimized combustion with pilot light and flame failure safety device

Piezo ignition

Removable cooking surface divided into four segments for easy cleaning and maintenance

Insulated combustion chamber under the cooking plate with insulation between the panels

Cooking plate placed on woven ceramic fibre support to avoid transmission of heat directly to the work top

	CODE	BURNER	L	W	H	POWER
	7865.N1.40703.22		400	700	280	6 kW
	7865.N1.80703.22		800	700	280	10 kW

7865.N1.80703.22

Induction Cookers

1,5MM STAINLESS STEEL WORKTOP

OVERHEATING SAFETY DEVICE

Glass ceramic cooking surface with independently controlled 1 or 2 heating zones of 3 kW power

Almost the entire surface of the ceramic plate can be used without 'dead' spots

Pan detection device: Heating activated only when the pan is in direct contact with the surface; automatic interruption when the pan is removed from the top;

Precise control of the cooking temperature with self-regulated heating zone according to the pan diameter

Maximum efficiency, less heat dissipation to the kitchen environment

	CODE	BURNER	L	W	H	VOLTAGE	POWER
	7865.N1.40703.IS2		400	700	280	400 V/ 3NPE 50/60 Hz	6 kW
	7865.N1.80703.IS2		800	700	280	400 V/ 3NPE 50/60 Hz	12 kW

7865.N1.80703.IS2

Wok Burners

EAC UA1.081 CE-1783

1,5MM MONOBLOCK COOKTOP

FLAME FAILURE SAFETY

High power cast iron burners

Durable and strong cast iron cooking ring designed to meet heavy load

Removable cooking ring ensures easier cleaning on the top

Removable drip tray under the burners for easy cleaning

	CODE	BURNER		L	W	H	POWER
	7865.N1.40703.WK		1	400	700	280	14 kW
	7865.N1.80703.WK		2	800	700	280	28 kW

7865.N1.80703.WK

Lavastone Grills

EAC UA1.081 CE-1783

FLAME FAILURE SAFETY

Micro perforated stainless steel efficient burners optimize cooking experience

Height adjustable and removable “V” shaped stainless steel grates channel the excess fat into fat collection drawer

Independently controlled heat zones for maximum versatility

Piezo spark ignition

Large fat collection drawer on the front side for uninterrupted cooking and easy cleaning

	CODE	BURNER		L	W	H	POWER
	7864.N1.40703.12		1	400	700	280	7 kW
	7864.N1.80703.20		2	800	700	280	14 kW

7864.N1.80703.20

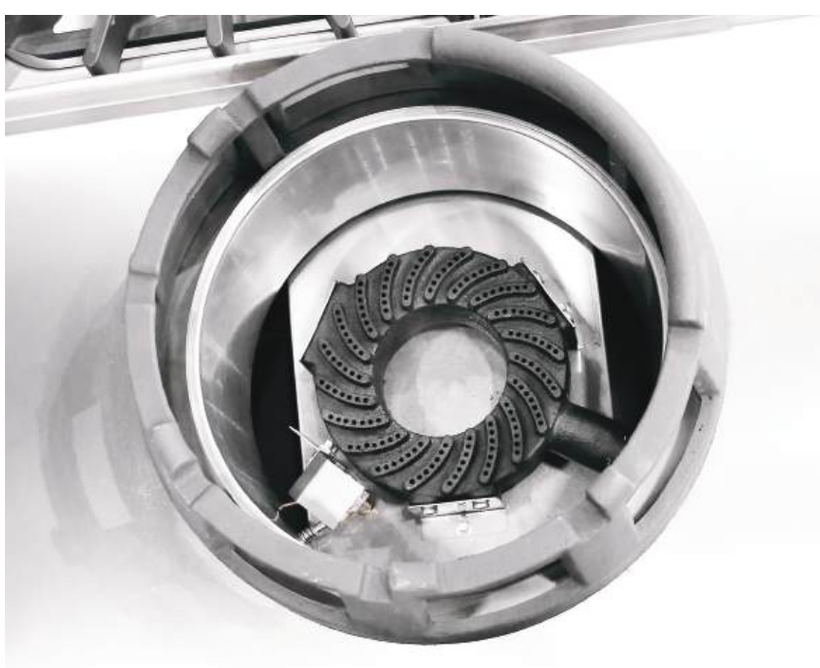

Grills

EAC | UAT OBI | CE-1783

1,5MM STAINLESS STEEL WORK TOP

FLAME FAILURE SAFETY

- Designed for high productivity, outstanding performance and even heat distribution
- Independently controlled cooking zones for economy during quiet periods
- "Satin finish" or "hard chrome coated" 15 mm thick mild steel plate contained in a watertight recess for more efficient cooking
- Large drain hole on cooking surface for ease of operation and cleaning
- Large fat collection drawer with a capacity of 1.5 liter for uninterrupted cooking
- Removable stainless steel high splash guards on the rear and sides of cooking surface for operational comfort
- Rapid heat up with stainless steel burners
- Thermostatic temperature control between 100-300°C
- Piezzo spark ignition
- Choice of cooking surface: Smooth, half ribbed or fully ribbed versions are available
- Hard chrome coated mirror finished option for ease of cleaning, reduced heat radiation and scratch resistance

7864.N1.80703.19

	CODE		L	W	H	VOLTAGE	TEMPERATURE	SURFACE		POWER
	7864.N1.40703.06		400	700	280	-	100-300 °C		Carbon Steel	7 kW
	7864.N1.40703.06C		400	700	280	-	100-300 °C		Chrome	7 kW
	7864.N1.40703.03		400	700	280	-	100-300 °C		Carbon Steel	7 kW
	7864.N1.40703.03C		400	700	280	-	100-300 °C		Chrome	7 kW
	7864.N1.80703.19		800	700	280	-	100-300 °C		Carbon Steel	14 kW
	7864.N1.80703.19C		800	700	280	-	100-300 °C		Chrome	14 kW
	7864.N1.80703.16		800	700	280	-	100-300 °C		Carbon Steel	14 kW
	7864.N1.80703.16C		800	700	280	-	100-300 °C		Chrome	14 kW
	7864.N1.80703.13		800	700	280	-	100-300 °C		Carbon Steel	14 kW
	7864.N1.80703.13C		800	700	280	-	100-300 °C		Chrome	14 kW
	7864.N1.40703.04		400	700	280	400V/3 NPE 50/60 Hz	50-300 °C		Carbon Steel	4.5 kW
	7864.N1.40703.04C		400	700	280	400V/3 NPE 50/60 Hz	50-300 °C		Chrome	4.5 kW
	7864.N1.40703.01		400	700	280	400V/3 NPE 50/60 Hz	50-300 °C		Carbon Steel	4.5 kW
	7864.N1.40703.01C		400	700	280	400V/3 NPE 50/60 Hz	50-300 °C		Chrome	4.5 kW
	7864.N1.80703.17		800	700	280	400V/3 NPE 50/60 Hz	50-300 °C		Carbon Steel	9 kW
	7864.N1.80703.17C		800	700	280	400V/3 NPE 50/60 Hz	50-300 °C		Chrome	9 kW
	7864.N1.80703.14		800	700	280	400V/3 NPE 50/60 Hz	50-300 °C		Carbon Steel	9 kW
	7864.N1.80703.14C		800	700	280	400V/3 NPE 50/60 Hz	50-300 °C		Chrome	9 kW
	7864.N1.80703.11		800	700	280	400V/3 NPE 50/60 Hz	50-300 °C		Carbon Steel	9 kW
	7864.N1.80703.11C		800	700	280	400V/3 NPE 50/60 Hz	50-300 °C		Chrome	9 kW

Chargrills

130 MM REVERSIBLE CAST IRON GRIDS

FLAME FAILURE SAFETY

- Independently controlled heat zones for maximum versatility
- Sturdy one piece stainless steel splash guard and removable cast iron grids for ease of cleaning
- Large fat collection drawer on the front side for uninterrupted cooking
- Heavy duty cast iron char radians and flame arrestor broiling grates on each burner
- 130mm wide reversible cast iron grids for self-cleaning and level broiling
- Pitched grease trough in each grate to provide fat run-off and controls flare-ups

	CODE	BURNER	L	W	H	POWER
	7864.N1.40703.72		400	700	280	7 kW
	7864.N1.80703.72		800	700	280	14 kW
	7864.N1.80703.70		800	700	280	20 kW
	7864.N1.12703.72		1200	700	280	21 kW

7864.N1.80703.72

Fryers

MONOBLOCK FRYER TANK

3,5 MIN COOKING TIME

- Durable stainless steel external panels
- AISI 304 stainless steel monoblock fryer tank with rounded corners for ease of cleaning and better hygiene
- Tank capacity of 12 liters
- Oil expansion recess incorporated in the top
- Continuous seal of the tank to the top by robotic welding
- Thermostatic regulation of oil temperature up to a maximum of 190°C
- Supplied with 2 half size basket per each tank
- Safety thermostat with manual reset
- Stainless steel burners and piezzo spark ignition on gas models
- Armored heating elements with low power density ensures optimum service life for the oil
- Heating element can rotate by 90° for ease of cleaning on electric models
- Easy draining with wide bore drain pipe located under the tank

7856.N1.40703.03

	CODE		L	W	H	VOLTAGE	TEMPERATURE	CAPACITY	POWER
	7856.N1.40703.03		400	700	280	-	110-190 °C	12 lt	10 kW
	7856.N1.80703.13		800	700	280	-	110-190 °C	12 lt + 12 lt	20 kW
	7856.N1.40703.11		400	700	280	400V / 3 NPE 50 / 60 Hz	60-190 °C	12 lt	11 kW
	7856.N1.80703.11		800	700	280	400V / 3 NPE 50 / 60 Hz	60-190 °C	12 lt + 12 lt	22 kW

Pasta Cookers

1,5MM MONOBLOCK COOKTOP

20 LITER WATER BASIN CAPACITY

AISI 304 stainless steel deep drawn water basin with rounded corners for ease of cleaning and better hygiene
Continuous seal of the water basin to the top by robotic welding
Starch removal to keep water fresh for longer and to ensure perfect results
Drainage surface is provided on which baskets can be placed for draining
Manual water refilling
Easy and fast draining with manual ball-valve
Micro perforated stainless steel burners with flame failure device on gas models
High efficient armored heating elements located inside the tank for rapid heat up on electric models.

	CODE		L	W	H	VOLTAGE	CAPACITY	POWER
	7858.N1.40703.11		400	700	280	400V/3 NPE 50/60 Hz	20 l	5.5 kW

7858.N1.40703.11

Electric Chip Scuttle

Recommended for use in combination with a fryer to allow excess oil to drip in the basin
Increased holding time with infrared heating element on the back side of the unit
Perforated false bottom shaped for easy food collection.

	CODE	BURNER	L	W	H	VOLTAGE	POWER
	7831.N1.40703.01		400	700	280	230 V/NPE 50/60 Hz	1 kW

7831.N1.40703.01

Bain Maries

1,5MM MONOBLOCK COOKTOP

COMPATIBLE GN 2/3

Used for keeping cooked food at serving temperatures using hot water
Manual water filling
Continuous seal of the monoblock water basin to the top by robotic welding
Easy and fast draining with manual rotary control on front panel
Thermostatic regulation of water up to a maximum of 90°C with safety thermostat on electric models
Silicone heating elements with thermal cutout positioned under the base of water basin
Stainless steel burner located under the water basin for efficient and rapid heating on gas models
Compatible with standard 1/1 gastronorm containers

	CODE		L	W	H	VOLTAGE	TEMP.	POWER
	7854.N1.40703.13		400	700	280	-	-	2 kW
	7854.N1.80703.13		800	700	280	-	-	4 kW
	7854.N1.40703.11		400	700	280	230 V / NPE 50 / 60 Hz	30-90 °C	1 kW
	7854.N1.80703.11		800	700	280	230 V / NPE 50 / 60 Hz	30-90 °C	2 kW

GN containers are ordered seperately

7854.N1.80703.11

Direct or indirect heating systems	Indirect Boiling pans
Round monoblock boiling pan suitable for cooking, sautéing and poaching	Uniformly heated in the base and side walls of the pan by integrally generated saturated steam at a temperature of 110°C and a pressure of 0,4 bar in the jacket.
Double skin lid with counter balanced mechanism for easy opening	Safety valve with manometer to avoid overpressure of the steam in the jacket
High quality thermal insulation of the pan for energy saving	External valve to evacuate manually excess ai accumulated in the jacket during heating phase.
Energy regulation through a control knob	Micro perforated high performance stainless steel burners with flame failure device on gas models
Chrome-plated draining valve with large athermic handle	Electronic ignition system visually controlled by indicator lamp on the front of gas models
Solenoid valve and chromed swivel tap on top to refill with hot and cold water	Incoloy armored heating elements fitted inside the jacket cavity base with safety thermostat on electric models
2" chrome-plated draining valve with large athermic handle	

Boiling Pans

	CODE		L	W	H	VOLTAGE	CAPACITY	HEATING	POWER
	7855.N1.80708.04		800	700	850	230 V/NPE 50/60 Hz	60 lt	Indirect	11 kW
	7855.N1.80708.14		800	700	850	230 V/NPE 50/60 Hz	60 lt	Direct	11 kW
	7855.N1.80708.01		800	700	850	400 V/3 NPE 50/60 Hz	60 lt	Indirect	9 kW

7855.N1.80708.04

Bratt Pans

1,5MM MONOBLOCK COOKTOP

FLAME FAILURE SAFETY

- Optional 10 mm thick duomat cooking surface with the combination of 2 different stainless steel for better thermal stability available on request
- Rounded corners for ease of cleaning
- Electronic ignition system visually controlled by indicator lamp on the front of gas models
- Safety system to cut off gas and heating if the pan is raised
- Safety thermostat to avoid overheating
- Thermostatic temperature control between 50-300°C on gas models and 50-300°C on electric models
- High quality thermal insulation for limited heat radiation and low energy consumption
- Double skin lid with counter balanced mechanism for easy opening
- Manual wheel-operated or optional electrically controlled tilt mechanism
- Chromed swivel tap on top to refill with hot or cold water.
- Even heat distribution with armored heating elements under the cooking surface on electric models

	CODE		L	W	H	VOLTAGE	CAPACITY	POWER
	7867.N1.80708.04		800	700	850	230 V / NPE 50 / 60 Hz	50 lt	13 kW
	7867.N1.80708.01		800	700	850	400 V / 3 NPE 50 / 60 Hz	50 lt	7.5 kW

7867.N1.80708.01

Worktops

7911.N1.80703.00

1.5 mm thick stainless steel work top

Compatible with other 700 series appliances

Heavy duty internal frame

	CODE	L	W	H
	7911.N1.40703.00	400	700	280
	7911.N1.80703.00	800	700	280

Base Cupboards

7911.N1.80705.00

Open base cupboards with door option

Large base compartment for storage of pots, pans, etc.

Double skin doors with ergonomic handle and magnetic lock to provide maximum comfort and hygiene

	CODE		L	W	H
	7876.N1.40705.00	with door	400	630	570
	7876.N1.80705.00	with door	800	630	570
	7876.N1.40705.10	without door	400	580	570
	7876.N1.80705.10	without door	800	580	570

01 0339.02813.01

02 6260.00072.70

03 6260.00072.44

04 6260.00072.42

05 6260.00072.71

06 6019.00005.28

07 2864.N1.70802.IZ

08 2864.N30.GR067.01

09 2864.Z20.01710054.A.65

10 2179.250.01830183.0.01

11 2864.Q3028.99

Accessories

	CODE	TYPE	APPLIANCE		TYPE	CODE	APPLIANCE
01	0339.02808.01	BASKET	PASTA COOKER	07	2864.N1.70802.IZ	BAR GRID	CHARGRILLS
02	0339.01313.01	BASKET	PASTA COOKER	08	2864.N30.GR067.01	GRILL CLEANING COMB	GRILLS
03	6260.00072.70	BASKET	FRYER	09	2864.Z20.01710054.A.65	GRILL CLEANING COMB	GRILLS
04	6260.00072.44	BASKET	FRYER	10	2179.250.01830183.0.01	FLAME REDUCER	GAS RANGES
05	6260.00072.63	BASKET BASE	FRYER	11	2864.N1.Q3028.99	GNITER MATCHES	GRILLS
06	6019.00005.28	WIRE GRID	GAS RANGE				

PRODUCT CODE	PRODUCT DESCRIPTION	MODEL	TYPE	L	W	H	Oven (kW)	kW	Kcal/h	BTU/h	G20 (m3/h)	G25 (m3/h)	G30 (kg/h)
7854.N1.40703.13	Bainmarie (gas)	OBG 4070	Gas	400	700	280		2	1.720	6.824	0,21	0,25	0,16
7854.N1.80703.13	Bainmarie (gas)	OBG 8070	Gas	800	700	280		4	3.440	13.648	0,42	0,49	0,31
7856.N1.40703.03	Fryer (gas)	OFGI 4070	Gas	400	700	280		10	8.600	34.120	1,06	1,23	0,78
7856.N1.80703.13	Fryer (gas)	OFGI 8070	Gas	800	700	280		20	17.200	68.240	2,12	2,46	1,56
7864.N1.80703.19C	Grill (gas) (smooth) (chrom)	OGG 8070	Gas	800	700	280		14	12.040	47.768	1,48	1,72	1,09
7864.N1.80703.13C	Grill (gas) (groove) (chrom)	OGG 8070 N	Gas	800	700	280		14	12.040	47.768	1,48	1,72	1,09
7864.N1.40703.06	Grill (gas) (smooth)	OGG 4070	Gas	400	700	280		7	6.020	23.884	0,74	0,86	0,55
7864.N1.40703.03	Grill (gas) (groove)	OGG 4070 N	Gas	400	700	280		7	6.020	23.884	0,74	0,86	0,55
7864.N1.40703.03C	Grill (gas) (groove) (chrom)	OGG 4070 N	Gas	400	700	280		7	6.020	23.884	0,74	0,86	0,55
7864.N1.40703.06C	Grill (gas) (smooth) (chrom)	OGG 4070 C	Gas	400	700	280		7	6.020	23.884	0,74	0,86	0,55
7864.N1.80703.16	Grill (gas) (half groove)	OGG 8070 1_2 N	Gas	800	700	280		14	12.040	47.768	1,48	1,72	1,09
7864.N1.80703.19	Grill (gas) (smooth)	OGG 8070	Gas	800	700	280		14	12.040	47.768	1,48	1,72	1,09
7864.N1.80703.13	Grill (gas) (groove)	OGG 8070 N	Gas	800	700	280		14	12.040	47.768	1,48	1,72	1,09
7864.N1.80703.16C	Grill (gas) (half groove) (chrom)	OGG 8070 1_2 N	Gas	800	700	280		14	12.040	47.768	1,48	1,72	1,09
7865.N1.40703.33	Cooker (gas)	OSOG 4070	Gas	400	700	280		10	8.600	34.120	1,06	1,23	0,78
7865.N1.80703.35	Cooker (gas)	OSOG 8070	Gas	800	700	280		20	17.200	68.240	2,12	2,46	1,56
7855.N1.80708.14	Boiling pan (gas) (direct)	OTGD 60	Gas	800	700	850		11	9.460	37.532	1,17	1,35	0,86
7855.N1.80708.04	Boiling pan (gas) (indirect)	OTGI 60	Gas	800	700	850		11	9.460	37.532	1,17	1,35	0,86
7864.N1.80703.70	Chargrill (gas)	ODG 8070	Gas	800	700	280		20	17.200	68.240	2,12	2,46	1,56
7865.N1.80703.WK	Wok burner (gas)	OWG 8070	Gas	800	700	280		28	24.080	95.536	2,97	3,44	2,18
7865.N1.40703.WK	Wok burner (gas)	OWG 4070	Gas	400	700	280		14	12.040	47.768	1,48	1,72	1,09
7865.N1.80703.53	Cooker (gas)	OSOG 8070 T	Gas	800	700	280		14	12.040	47.768	1,48	1,72	1,09
7865.N1.80708.10	Range (gas)	OSOGF 8070	Gas	800	700	850	7	27	23.220	92.124	2,86	3,32	2,11
7867.N1.80708.04	Tilting bratt pan (gas) (manuel)	OTG 50	Gas	800	700	850		13	11.180	44.356	1,38	1,60	1,01

600 SERIE

34
Electric Ranges
Gas Boiling Tops
Wok Burners

35
Chargrill
Grills
Fryers

36
Pasta Cooker
Electric Chip Scuttle
Bain Marie

37
Worktops
Base Cupboards

Electric Ranges

Under-counter oven:
Fully stainless steel chamber with 3 level removable rack guide for grid/pan 1/1GN
Heating elements located on top and bottom with individual control.
40mm thick stainless steel door to ensure good insulation
Ergonomic and strong door handles
Thermostatic temperature control between 50-250°C

	CODE	BURNER	L	W	H	VOLTAGE	POWER
	7890.N1.60605.11		600	600	610	230 V / NPE 50 / 60 Hz	3 kW

7890.N1.60605.11

Boiling Tops

FLAME FAILURE SAFETY

Ease of cleaning and extra strength with deep drawn monoblock cooktop
4 open burners combined with electric oven
Flame failure safety devices on all open burners
Chrome plated burners designed for maximum power, combustion and efficiency

	CODE		L	W	H	VOLTAGE	BURNER POWER	POWER
	7865.N1.40603.33		400	600	240	-	5+3.5 kW	8.5 kW
	7865.N1.60603.35		600	600	240	-	5x2+3.5x2 kW	17 kW
	7865.N1.40603.13		400	600	240	230 V / NPE 50-60 Hz	2+1.5 kW	3.5 kW
	7865.N1.60603.14		600	600	240	400V/3 NPE 50/60 Hz	2x2+2x1.5 kW	7 kW

7865.N1.60603.35

Wok Burners

FLAME FAILURE SAFETY

High power cast iron burners
Removable cooking ring ensures easier cleaning on the top
Durable and strong cast iron cooking ring designed to meet heavy load
Removable drip tray under the burners for easy cleaning

	CODE	BURNER		L	W	H	POWER
	7865.N1.40603.WK		1	400	600	240	12 kW

7865.N1.40603.WK

Chargrills

130 MM REVERSIBLE CAST IRON GRIDS

FLAME FAILURE SAFETY

- Sturdy one piece stainless steel splash guard and removable cast iron grids for ease of cleaning
- Large fat collection drawer on the front side for uninterrupted cooking
- Heavy duty cast iron char radians and flame arrestor broiling grates on each burner
- Reversible cast iron grids for self-cleaning and level broiling
- Pitched grease trough in each grate to provide fat run-off and controls flare-ups

7864.N1.60603.70

	CODE	BURNER	L	W	H	POWER
	7864.N1.60603.70		600	600	240	9 kW

Grills

FLAME FAILURE SAFETY

- Designed for high productivity, outstanding performance and even heat distribution
- Independently controlled cooking zones for economy during quiet periods
- "Satin finish" mild steel plate contained in a watertight recess for more efficient cooking
- Large drain hole on cooking surface for ease of operation and cleaning
- Large fat collection drawer with a capacity of 1 liter for uninterrupted cooking
- Stainless steel high splash guards on the rear and sides of cooking surface for operational comfort
- Rapid heat up with stainless steel burners
- Piezzo spark ignition
- Choice of cooking surface: Smooth or fully ribbed versions are available

7864.N1.60603.19

	CODE		L	W	H	VOLTAGE	TEMPERATURE	SURFACE		POWER
	7864.N1.40603.06		400	600	240	-	100-300 °C		Carbon Steel	3 kW
	7864.N1.40603.03		400	600	240	-	100-300 °C		Carbon Steel	3 kW
	7864.N1.60603.19		600	600	240	-	100-300 °C		Carbon Steel	5 kW
	7864.N1.40603.04		400	600	240	230 V NPE 50/60 Hz	50-300 °C		Carbon Steel	3 kW
	7864.N1.40603.01		400	600	240	230 V NPE 50/60 Hz	50-300 °C		Carbon Steel	3 kW
	7864.N1.60603.17		600	600	240	400 V/3 NPE 50/60 Hz	50-300 °C		Carbon Steel	4,5 kW

Fryers

MONOBLOCK FRYER TANK

7 LITER OIL TANK CAPACITY

- Durable stainless steel external panels
- AISI 304 stainless steel monoblock fryer tank with rounded corners for ease of cleaning and better hygiene
- Oil expansion recess incorporated in the top
- Continuous seal of the tank to the top by robotic welding
- Thermostatic regulation of oil temperature up to a maximum of 190°C
- Supplied with 1 full size basket per each tank
- Safety thermostat with manual reset
- Armored heating elements with low power density ensures optimum service life for the oil
- Easy and safe draining with drain pipe with push and turn safety mechanism, located on the front panel

7856.N1.60603.21

	CODE		L	W	H	VOLTAGE	TEMPERATURE	CAPACITY	POWER
	7856.N1.40603.11		400	600	240	400V/3 NPE 50/60 Hz	60-190 °C	7 lt	6 kW
	7856.N1.60603.21		600	600	240	400V/3 NPE 50/60 Hz	60-190 °C	7 lt + 7 lt	12 kW

Pasta Cookers

15 LITER WATER BASIN CAPACITY

- Stainless steel deep drawn water basin with rounded corners for ease of cleaning and better hygiene
- Continuous seal of the water basin to the top by robotic welding
- High outputs of pasta with 15 liters water basin capacity
- Starch removal to keep water fresh for longer and to ensure perfect results
- Manual water refilling
- Easy and fast draining with manual rotary control on front panel
- High efficient armored heating elements located inside the tank for rapid heat up

	CODE		L	W	H	VOLTAGE	CAPACITY	POWER
	7858.N1.40603.11		400	600	240	400V/3 NPE 50/60 Hz	15 lt.	3.4 kW

7858.N1.40603.11

Electric Chip Scuttle

- Recommended for use in combination with a fryer to allow excess oil to drip in the basin
- Increased holding time with infrared heating element on the back side of the unit
- Perforated false bottom shaped for easy food collection.

	CODE		L	W	H	VOLTAGE	POWER
	7831.N1.40603.01		400	600	240	230 V/NPE 50/60 Hz	1 kW

7831.N1.40603.01

Bain Maries

COMPATIBLE GN 1/1

- Used for keeping cooked food at serving temperatures using hot water
- Manual water filling
- Continuous seal of the monoblock water basin to the top by robotic welding
- Easy and fast draining with manual rotary control on front panel
- Thermostatic regulation of water up to a maximum of 90°C with safety thermostat on electric models
- Compatible with standard 1/1 gastronorm containers
- High efficient heating elements for rapid heat up

	CODE		L	W	H	VOLTAGE	TEMP.	POWER
	7854.N1.40603.11		400	600	250	230 V / NPE 50/60 Hz	30-90 °C	1.5 kW

7854.N1.40603.11

GN containers are ordered seperately

Worktops

7911.N1.40603.00

Stainless steel work top

Compatible with other 600 series appliances

Heavy duty internal frame

	CODE	L	W	H
	7911.N1.40603.00	400	600	240
	7911.N1.60603.00	600	600	240

Base Cupboards

7876.N1.40605.00

Large base compartment for storage of pots, pans, etc.

Double skin doors with ergonomic handle and magnetic lock to provide maximum comfort and hygiene

	CODE		L	W	H
	7876.N1.40605.00	with door	400	550	610
	7876.N1.60605.00	with door	600	550	610

01 0339.02808.01

02 0339.01313.01

03 6260.00072.57

04 6260.00072.78

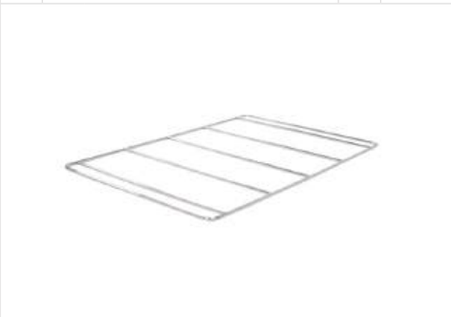

05 6019.00005.58

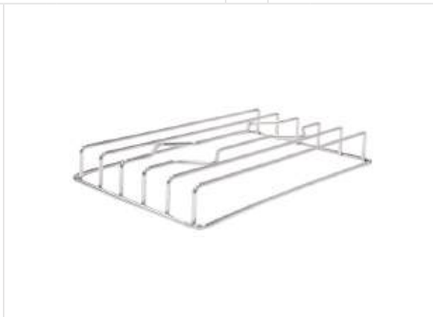

06 6019.00005.38

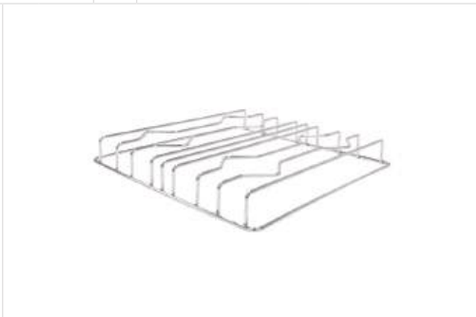

07 6019.00005.39

Accessories

	CODE	TYPE	APPLIANCE		TYPE	CODE	APPLIANCE
01	0339.02808.01	BASKET	PASTA COOKER	05	6019.00005.58	WIRE GRID	RANGE
02	0339.01313.01	BASKET	PASTA COOKER	06	6019.00005.38	PAN SUPPORT GRILL	GAS BOILING TOP
03	6260.00072.44	BASKET	FRYER	07	6019.00005.39	PAN SUPPORT GRILL	GAS BOILING TOP
04	6260.00072.78	BASKET BASE	PASTA COOKER				

OVENS

40
Combi Oven &
Convection Oven

50
Baking Oven

52
Prover Cabinet

53
Coal Stove Oven

54
Charcoal Grill
Charcoal Grill With Hood

55
Large Oven
Pizza Oven

Smart tray system

• Intelligent tray feature at the same time on the basis of the rack can be cooked at different times

Self-Clean system

• 8 programs (cleaning of the steam generator, T9, rinse & polishing, intermediate, without a tablet, fast, medium, intensive) automatic washing mode
• Being able to detect the amount of lime formed in the steam generator and provide a cleaning warning according to the lime rate

For a healtier you

• Precise fermentation without the need for fermentation appliance
• Manual moisturizing feature (moisturizing dose adjustable)
• Automatic, active rinsing and drainage of steam generator by a pump

Pre-heating system

• Adjustable cooking temperature
• Long-term slow cooking with Delta T cooking option
• Free cooking with up to 24 hours of cooking and the actual duration of cooking can be observed
• Construction and air ducts for homogenous distribution of hot cooking air

All-around heat insulation

• The cooking and boiler are completely made of AISI 304 Cr-Ni and the outer cover of AISI 430 stainless steel sheet.
• Easy to install door seal to prevent steam loss
• Safe, double step door lock system
• Double glass to prevent heat loss

Less fuel, more power

• Low-emission and high-efficiency combustion system (premix system) and quiet-running high-performance burners.
• It can work with LPG or natural gas and can be transformed without any modification
• Gas valve, electronic ignition system, a safety system that automatically cuts gas if the flame extinguishes

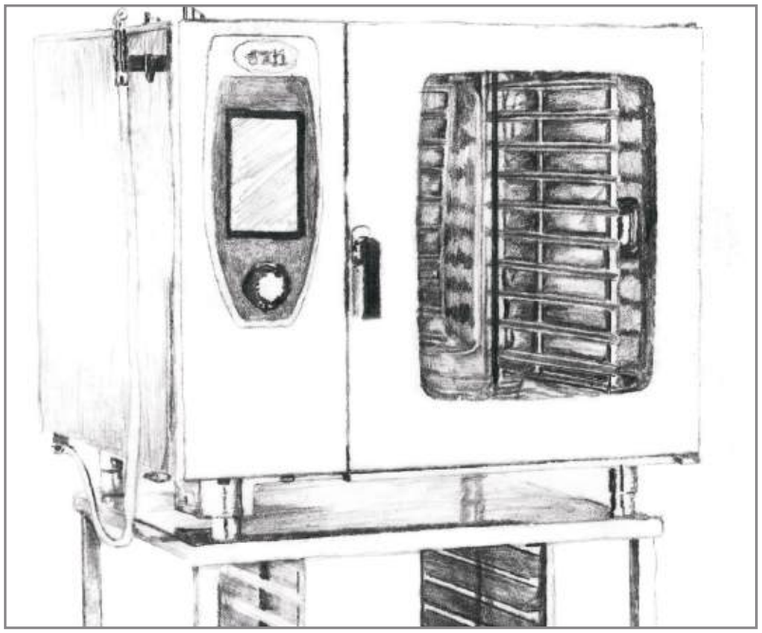

We are trying to be creative without being outrageous for you to bring a new twist to familiar foods

- 10-inch touch-sensitive control panel for ease of use, even for inexperienced personnel
- Three different cooking modes
  1. Combi mode (25-280 °C), humidity can be adjusted to the desired ratio
  2. Dry heat mode (25-280 °C)
  3. Steam mode (25-130 °C)
- Banquet heating mode
- Specially designed oven cabin with fully hygienic and rounded interior corners
- All-around heat insulation
- A hinged control panel allows pre-servicing and inspection
- Height-adjustable feet
- High temperature and vapor resistant interior cabin halogen lighting lamp
- The fish, chicken, and meat cooking possibility with a central temperature probe (25-99°C).
- Manual hand spray for cleaning the oven cavity
- The manual steam spray system
- Temperature and time display panels from the touchscreen
- More than 100 ready-made recipes (over 1000 can be registered)
- The described number can be saved (over 1000 can be registered)
- Recipe copying and software downloading feature with USB input
- Actual date and time on the touchscreen
- Available in the desired language
- 8-step cooking program to create with the sauce adding warning system
- Lower cooking time than standard convection ovens
- The interior cabin fan system that stops in a short time when the door is opened
- Automatic resealable drainage
- Easy washability in the cabin
- To be able to perform active control of all functions in service mode
- Limit thermostats in the steam generator and cavity
- Powerful steam generator with an automatic filling system
- Water inlet: 3/4 ", water pressure: 1,5 - 4 bar
- Heat exchanger pipes with long life and heat conduction performance

Combi Ovens

TECHNICAL PROPERTIES		TYPE 101	TYPE 102	TYPE 202
PRODUCT CODES	⚡	7890.C1.10E11.01	7890.C1.10E21.01	7890.C1.20E21.01
	🔥	-	7890.C1.10G21.03	7890.C1.20G21.03
MODEL NAMES	⚡	OKFE 101 C	OKFE 102 C	OKFE 202 C
	🔥	-	OKFG 102 C	OKFG 202 C
CAPACITY	⚡	10 GN 1/1	10 GN 2/1	20 GN 2/1
	🔥	-	10 GN 2/1	20 GN 2/1
DIMENSIONS (WxDxH)	⚡	1008x896x1089 mm	1230x1096x1089 mm	1250x1117x1854 mm
	🔥	-	1230x1096x1089 mm	1250x1117x1854 mm
TOTAL ELEC. POWER	⚡	19 kW	37 kW	66 kW
	🔥	-	1 kW	2 kW
ELECTRIC SUPPLY VOLTAGE	⚡	400 V	400 V	400 V
	🔥	-	230 V	230 V
OPERATING FREQUENCY	⚡	50/60 Hz	50/60 Hz	50/60 Hz
	🔥	-	50/60 Hz	50/60 Hz
FUSE RATING	⚡	3x32 A	3x63 A	3x125 A
	🔥	-	16 A	16 A
THERMOSTAT	⚡	25 - 280 ˚C	25 - 280 ˚C	25 - 280 ˚C
	🔥	-	25 - 280 ˚C	25 - 280 ˚C
RAIL SPACING	⚡	68 mm	68 mm	63 mm
	🔥	-	68 mm	63 mm
GAS CONNECTION	⚡	-	-	-
	🔥	-	3/4”	1”
WATER CONNECTION	⚡	3/4”	3/4”	3/4”
	🔥	3/4”	3/4”	3/4”
DRAIN CONNECTION	⚡	50 mm	50 mm	50 mm
	🔥	-	50 mm	50 mm
DRY HEAT POWER	⚡	18 kW	32 kW	64 kW
	🔥	-	42 kW	84 kW
STEAM POWER	⚡	18 kW	36 kW	54 kW
	🔥	-	35 kW	40 kW

What Is a Convection Oven?

A countertop convection oven resembles a standard toaster oven in design, featuring a rectangular shape with a front door hinged at the bottom. However, unlike a conventional toaster oven, a convection oven is equipped with a built-in fan that circulates hot air within the cooking chamber.

This air movement, known as the convection effect, enhances heat transfer to the surface of the food, resulting in faster cooking times compared to a traditional oven. Additionally, this process improves the browning and crisping of food surfaces, delivering superior cooking results.

Similar to a toaster oven, a convection oven includes an interior rack capable of accommodating a sheet pan. Ideally, a perforated sheet pan is used to maximize airflow and optimize the convection process.

The oven's wide design enables food to be arranged in a single, evenly distributed layer on the rack, preventing stacking or layering. This arrangement is essential for maintaining proper airflow and ensuring uniform cooking throughout.

6 GN 1/1 - 10 GN 1/1 - 20 GN 1/1 - 40 GN 1/1 capacity	Silicon sealing on the door to prevent heat escape from the cabinet during operation.
All gas models work with LPG and natural gas	Integrated stainless steel fan for even cooking
Gas and electrical models are available	The safety door lock switch stops the oven if opened during operation.
Stainless steel body and cooking cabinet	Double - glazed, tempered, heat - resistant door glass.
Insulated heating cabinet for heat saving	Easy cleaning of cooking cabinet door glass inside.
Safety thermostat against excessive heating inside a cabinet	Four - position function knob
Digital thermostat heat control	Secure gas valve with automatic ignition system.
Injection system for steam	20 GN 1/1 adaptable to 10 GN 2/1

CODE		CAPACITY	VOLTAGE	GAZ	ELEC	TRAY SHELVES DISTANCE	MAX. TEMP.	WATER INLET DIA.	GAS INLET DIA.	DIMENSION (mm)		
										W	L	MAX
7890.6G110.03		6 GN 1/1	230V/50-60 Hz	12 kW	0.3 kW	68 mm	280	3/4”	3/4”	900	816	928
7890.95708.01		6 GN 1/1	400V/50-60 Hz	-	11 kW	68 mm	280	3/4”	-	900	816	778
7890.95701.03		10 GN 1/1	230V/50-60 Hz	19 kW	0.3 kW	68 mm	280	3/4”	3/4”	900	816	1220
7890.10G11.01		10 GN 1/1	400V/50-60 Hz	-	17 kW	68 mm	280	3/4”	-	900	816	1057
7890.10G21.03		10 GN 2/1	230V/50-60 Hz	30 kW	0.4 kW	68 mm	280	3/4”	3/4”	1100	932	1220
7890.10G21.01		10 GN 2/1	400V/50-60 Hz	-	21 kW	68 mm	280	3/4”	-	1100	932	1067
7890.20G21.03		20 GN 2/1	230V/50-60 Hz	40 kW	0.8 kW	68 mm	280	3/4”	3/4”	1100	950	2021
7890.20G21.01		20 GN 2/1	400V/50-60 Hz	-	42 kW	68 mm	280	3/4”	-	1100	944	1910
7890.20G21.03TK*		20 GN 2/1	230V/50-60 Hz	40 kW	0.8 kW	68 mm	280	3/4”	3/4”	1100	950	2021
7890.20G21.01TK*		20 GN 2/1	400V/50-60 Hz	-	42 kW	68 mm	280	3/4”	-	1100	944	1910

*These models come with a trolley kit - Kit de chariot inclus.

Convection Oven Cooking Capacity

FOODS	TRAY	OKFG 601 OKFE 601	OKFG 101 OKFE 101	OKFG 102 OKFE 102	OKFG 202 OKFE 202	TEMP	COOKING TIME
Millefeuille Pastry	Perforated Aluminium	75 Person	170 Person	250 Person	450 Person	170-180 ˚C	18-20 min.
Makaroni	Plate 40mm	9 kg	15 kg	30 kg	60 kg	180 ˚C	30 min.
Roast Beef	Plate 65mm	24 kg	45 kg	75 kg	140 kg	170 ˚C	100 min.
Lamb Chops	Grill	18 kg	30 kg	60 kg	120 kg	170 ˚C	100 min.
Chicken	Grill	12 Piece	25 Piece	50 Piece	100 Piece	160 ˚C	70 min.
Chicken Quarter	Grill	60 Piece	100 Piece	200 Piece	400 Piece	170 ˚C	55 min.
Trout	Grill	240 Piece	240 Piece	240 Piece	480 Piece	160 ˚C	20 min.
Salmon	Grill	60 Piece	100 Piece	200 Piece	400 Piece	180 ˚C	20 min.
Potato Sauce	Plate 65mm	75 Person	140 Person	250 Person	450 Person	180 ˚C	50 min.
Stuffed Peppers	Plate 65mm	75 Person	140 Person	250 Person	450 Person	160 ˚C	40 min.
Lasagna	Plate 65mm	75 Person	140 Person	250 Person	450 Person	170 ˚C	45 min.
Cake (Tarts)	Perfoted 20mm	60 Person	100 Person	200 Person	400 Person	180 ˚C	30/40 min.
Tomato Gratin	Grill	140 Piece	230 Piece	460 Piece	920 Piece	170 ˚C	20 min.
Eggplant Gratin	Grill	100 Piece	170 Piece	340 Piece	680 Piece	160 ˚C	30 min.
Stuffed Zucchini	Plate 65mm	120 Piece	200 Piece	400 Piece	800 Piece	160 ˚C	50 min.
Stuffed Eggplants	Plate 40mm	90 Person	150 Person	300 Person	600 Person	160-200 ˚C	30 min.
Roll Bread	Perforated Aluminium	45 Person	75 Person	150 Person	300 Person	190 ˚C	15-18 min.
Puff Pastry	Plate Aluminium	9 kg	15 kg	30 kg	60 kg	160 ˚C	20 min.
Sponge Cake	Plate 20 mm	3 kg	5 kg	10 kg	20 kg	170 ˚C	20 min.
Pastry (Tray)	Plate Aluminium	75 Person	140 Person	250 Person	450 Person	180 ˚C	40 min.
Muffin	Perforated Aluminium	50 Piece	85 Piece	170 Piece	340 Piece	160 ˚C	15 min.
Creme Caramel	Plate 40mm	75 Person	140 Person	250 Person	450 Person	170 ˚C	50 min.

01 7895.FK202.40

Plate Trolley for Combi Oven

Should be ordered with thermal cover (GBRA.06585.01)
The thermal cover price not included to plate trolley
The plate trolley price does not include to thermal cover.

02 7895.FK202.30

Trolley & Kit for Combi Oven

03 7895.FK202.50

40x60 Trolley & Kit for Combi Oven

04 7895.FK202.60

40x60 Trolley & Kit for Convection Oven

05 7895.FK202.20

Trolley & Kit for Convection Oven

06 GBRA.06585.01

Combi Oven Plate Trolley Thermal Cover

The thermal cover price does not include to plate trolley.

07 7895.FK102.10

Trolley for Kit

08 7895.10G21.TK

Oven Tray Kit

09	7876.09070.22

Stand with Gn 1/1 Guide Rails for 601-101

10	7876.10585.22

Stand with Gn 2/1 Guide Rails for 102

11	7911.08267.11

Counter Bench for OKF 101 (Demounted)

12	7911.10572.08

Counter Bench for OKF 102 (Demounted)

13	2890.GR005.01

40x60 Tray Kit for 102 Convection Oven

14	2890.C30.GR035.02

40x60 Tray Kit for 102 Combi Oven

15	2890.C30.GR035.01	16	6260.00072.93
40x60 Tray Kit for 101 Combı Oven		40x60 Fan Guard for 101 Combı Oven	

17	7145.05333.02	18	7145.05333.01 7145.05365.02	19	6260.00058.100Q	20	6260.00058.101Q

21	2890.C30.GR033.01	22	2890.C30.GR043.01	23	2890.C30.GR041.01	24	6260.00072.91

25	2890.C30.GR042.01	26	2890.C30.GR042.02

Accessories

	CODE	TYPE	MODELS	DIMENSIONS
1	7895.FK202.40	PLATE TROLLEY	202 COMBI MODELS	775 x 931 x 1715 mm
2	7895.FK202.30	TROLLEY & KIT for COMBI OVEN	FOR 202 MODELS	1714 X 930 X 774 MM
3	7895.FK202.50	40x60 TRAY TROLLEY	202 COMBI MODELS	775 x 931 x 1715 mm
4	7895.FK202.60	40x60 TRAY TROLLEY	202 CONVECTION MODELS	640 x 781 x 1795 mm
5	7895.FK202.20	TRAY TROLLEY	202 CONVECTION MODELS	640 x 815 x 1795 mm
6	GBRA.06585.01	PLATE TROLLEY THERMAL COVER	202 COMBI MODELS	650 x 850 x 1355 mm
7	7895.FK102.10	KIT TROLLEY	102 CONVECTION MODELS	635 x 870 x 979 mm
8	7895.10G21.TK	TRAY KIT	102 CONVECTION MODELS	589 x 726 x 704,5 mm
9	7876.09070.22	SLIDE LOWER BENCH	61-101 MODELS	900 x 750 x 600 mm
10	7876.10585.22	SLIDE LOWER BENCH	102 MODELS	1050x 850 x 600 mm
11	7911.08267.11	LOWER BENCH (UNASSEMBLED)	61-101 CONVECTION MODELS	850 x 610 x 600 mm
12	7911.10572.08	LOWER BENCH (UNASSEMBLED)	102 CONVECTION MODELS	1050 x 720 x 600 mm
13	2890.GR005.01	40x60 SHELF SYSTEM	102 CONVECTION MODELS	103,5 x 610 x 710 mm
14	2890.C30.GR035.02	40x60 SHELF SYSTEM	102 COMBI MODELS	103,5 x 610 x 724 mm
15	2890.C30.GR035.01	40x60 SHELF SYSTEM	101 COMBI MODELS	52,5 x 605 x 731 mm
16	6260.00072.93	40x60 WIRE FAN GUARD	101 COMBI MODELS	605 x 17 x 735 mm
17	7145.05333.02	GN 1/1 ITALIAN NON-STICK FLAT PAN 1.5mm	61-101-102-202 MODELS	530 x 325 mm
18	7145.05333.01	GN 1/1 ITALIAN NON-STICK FLAT PAN WITH HOLES 1.5mm	61-101-102-202 MODELS	530 x 325 mm
	7145.05365.02	GN 2/1 ITALIAN NON-STICK FLAT PAN WITH HOLES 2mm PLAT	102-202 MODELS	530 x 650 mm
19	6260.00058.100Q	GN 1/1 NON-STICK FILLED CASTING GRILL	61-101-102-202 MODELS	530 x 325 mm
20	6260.00058.101Q	GN 1/1 NON-STICK CASTING GRILL	61-101-102-202 MODELS	530 x 325 mm
21	2890.C30.GR033.01	GN 1/1 CHICKEN FRY WIRE	61-101-102-202 MODELS	530 x 325 x 152,5 mm
22	2890.C30.GR043.01	GN 1/1 ENAMEL COATED OVEN TRAY	61-101-102-202 MODELS	530 x 325 x 40 mm
23	2890.C30.GR041.01	GN 1/1 OVEN GRILL SKEWING FRAME	61-101-102-202 MODELS	530 x 325 x 35 mm
24	6260.00072.91	PANIER FOUR INOX GN 1/1	61-101-102-202 MODELS	530x325x44 mm
25	2890.C30.GR042.01	OVEN GRILL SQUARE SKEWERS 5x5 mm	61-101-102-202MODELS	20 x 42,5 x 622,5 mm
26	2890.C30.GR042.02	OVEN GRILL FLAT SKEWERS 5x15 mm	61-101-102-202 MODELS	20 x 42,5 x 622,5 mm

Why a Baking Oven?

Our baking ovens are meticulously engineered to deliver an exceptional cooking experience. Designed with a comprehensive analysis of user needs, they are available in a wide array of designs and features to cater to diverse requirements. These industrial-grade ovens, equipped with the dimensions and specific functionalities necessary for professional operations, are capable of efficiently meeting the demands of large-scale enterprises.

Whether integrated into a sophisticated in-store baking system or utilized for production in artisan bakeries, the baking oven serves as the cornerstone of any bakery. The success of a bakery operation largely depends on selecting the right oven, as this equipment plays a critical role in determining the quality of baked products. Additionally, it significantly influences the efficiency and workflow of the baking process, directly impacting production outcomes and overall business performance.

Baking Oven

7890.60400.3T

7890.60400.3TE

* 30-260°C convection (turbo) cooking.	Safety thermostat against excessive heating inside a cabinet
Fans with reversing gear for homogeneous temperature	Injection system for steam
Quick extraction of the humidity from the cooking chamber	Silicon sealing on the door to prevent heat escape from the cabinet during operation.
Solenoid valve that allows the connection between oven and water supply	Integrated stainless steel fan for even cooking
Aluminum flat pans	The safety door lock switch stops the oven if opened during operation.
Manual up - to - down door opening	Double - glazed, tempered, heat - resistant door glass.
Rounded cooking chamber made of high - resistant stainless steel for hygiene and ease of cleaning	Easy cleaning of cooking cabinet door glass inside
* 4-step cooking program capability, including preheating and cooking modes.	** Oven illumination with LED lights.
* 6 quick cooking program options for users.	Under-counter static oven:
* 99 user program memory capacity.	

CODE			L	W	H	VOLTAGE	POWER	TEMPERATURE RANGE	CAPACITY
7890.60400.4T		⚡	805	828	546	400 V 3NPE 50/60 Hz	6,5 kW	30 - 250 °C	40x60 cm- 4 Trays
7890.60400.3T		⚡	805	828	471	230 V NPE 50/60 Hz	3,25 kW	30 - 250 °C	40x60 cm - 3 Trays
7890.60400.4TE	*	⚡	805	828	546	400 V 3NPE 50/60 Hz	6,5 kW	30 - 260 °C	40x60 cm- 4 Trays
7890.60400.3TE	*	⚡	805	828	471	230 V NPE 50/60 Hz	3,25 kW	30 - 260 °C	40x60 cm - 3 Trays
7890.33360.4T		⚡	559	758	546	230 V NPE 50/60 Hz	3,25 kW	30 - 250 °C	GN 2/3- 4 Trays
7890.60400.7T		⚡	835	841	828	400 V 3NPE 50/60 Hz	10 kW	30 - 250 °C	40x60 cm- 7 Trays
7890.60400.7TE	*/**	⚡	835	841	828	400 V 3NPE 50/60 Hz	10 kW	30 - 260 °C	40x60 cm - 7 Trays

Prover Cabinet

CODE		L	W	H	VOLTAGE	POWER	TEMP. RANGE	CAPACITY
7868.40608.MD	⚡	807	722	823	230 V NPE 50/60 Hz	2,5 kW	30 - 65 °C	40x60 cm- 8 Trays

7868.40608.MD

Prover Cabinet

CODE		L	W	H	VOLTAGE	POWER	TEMP. RANGE	CAPACITY
7868.17107.MD		1708	1070	830	230 V NPE 50/60 Hz	1,75 kW	30 - 65 °C	40x60 cm-12 Trays

7868.17107.MD

Prover Cabinet

CODE		L	W	H	VOLTAGE	POWER	TEMP. RANGE	CAPACITY
7868.98987.MD		982	970	736	230 V NPE 50/60 Hz	1,75 kW	30 - 65 °C	40x60 cm-12 Trays

7868.98987.MD

Prover Cabinet

7919.70182.MD

CODE		L	W	H	VOLTAGE	POWER	TEMP. RANGE	CAPACITY
7919.70182.MD		910	827	1816	230 V NPE 50/60 Hz	2 kW	30-65 °C	40x60 cm-22 Trays

Prover Cabinet

7868.77180.MD

CODE		L	W	H	VOLTAGE	POWER	TEMP. RANGE	CAPACITY
7868.77180.MD		775	999	1824	230 V NPE 50/60 Hz	2.5 kW	30-65 °C	GN 2/1- 17 Tray

2x1

GRILL AND OVEN
in one sole machine

FUELED SOLELY BY CHARCOAL
to bring about the
DEEP RICH FLAVORS
distinct to coal-fired cooking

INCREASED TEMPERATURE AND FLAME CONTROL
through effective airflow system

COOK ALL TYPES OF INGREDIENTS
meat, fish, seafood
vegetables & desserts

FASTER & CLEANER
than an open grill
consuming aapprox.
40% LESS CHARCOAL

EFFORTLESS DOOR OPENING SYSTEM
with zero maintanence

HEAT-FREE KITCHEN ENVIRONMENT
for the chef

Easy to mange, secure & ergonomic
AIRFLOW SYSTEM FOR THE CHEF

With the capacity to last
an entire service between
250°C AND 500°C

CLEANER WORKSPACE
with enclosed ask drawer
and grease collector

FASTER MAILLARD REACTION
with optional results

Working at high temperatures
sear and grills the product
SEALING IN ITS JUICES
& ENHANCING ITS FLAVOR

04

Charcoal Oven

- Top, sides and back in stainless steel with satin Scotchbrite finish
- Door and frame in cast iron
- Stainless steel oven interior resistant to high temperatures
- Energy saving thanks to reinforced insulation with ceramic fiber cladding
- Exterior door profile in enamelled steel
- Thermometer displaying oven interior temperature up to 500˚C
- Adjustment of the oven internal temperature, thanks to airflow system
- Protective grid in the chimney to prevent the coal from falling into the aeration
- Equipped with two cooking grids
- Equipped with a tong
- Equipped with an ash box installed in the cabinet under the oven
- Supplied with 4 adjustable feet
- Quick extraction of the humidity from the cooking chamber

CODE	L	W	H		IGNITION TIME	COAL CONSUM.	EUIVALENT POWER	AVERAGE CAPACITY	COOKING TEMP.
7890.KYK00.01	699	830	1835	With Cupboard	30-40 min	14-18 kg / day	450°	80 kg / hour	300-360˚C
7890.KYK00.02	686	830	1242	Without Cupboard	30-40 min	14-18 kg / day	450°	80 kg / hour	300-360˚C

01	6019.00005.75

02	2890.Z30.GR037.01

03	2890.Z30.GR038.01

04	9467.02002.00

05	9467.SGSFT.40

06	6110.00029.163

Accessories

	CODE	TYPE	APPLIANCE		TYPE	CODE	APPLIANCE
01	6019.00005.75	TONG FOR CHARCOAL OVEN		04	9467.02002.00	COAL TONG	
02	2890.Z30.GR037.01	GRILL CLEANING HANDLE		05	9467.SGSFT.40	TONG	
03	2890.Z30.GR038.01	ASH HANDLE FOR CHARCOAL OVEN		06	6110.00029.163	ACIER INOX	

Charcoal Grill

7864.10503.04

CODE	L	W	H
7864.10503.04	1000	500	300

Charcoal Grill With Hood

7864.10502.05

CODE	L	W	H
7864.10502.05	1000	500	1150

Large Oven

7890.12901.55

CODE	OUTLET DIM.				INLET DIM.			POWER		SUPPLY VOLTAGE	WEIGHT
	L	W	H		L	W	H	GAS	ELECT.		
7890.12908.54	1200	900	836		947	690	500	13 kW	3.43 kW	230V / NPE 50-60 Hz	139 kg
7890.12901.55	1200	900	1561		947	690	500	2 x 13 kW	2 x 3.43 kW	230V / NPE 50-60 Hz	278 kg
7890.12908.52	1200	900	836		947	690	500	-	9 kW	400V / NPE 50-60 Hz	139 kg
7890.12901.51	1200	900	1561		947	690	500	-	9 kW	400V / NPE 50-60 Hz	278 kg

Pizza Oven

8890.P5050.02

CODE	OUTLET DIM.				CAPACITY	INLET DIM.			POWER	TEMP.	SUPPLY VOLTAGE	WEIGHT
	L	W	H			L	W	H				
8890.P5050.01	760	755	350		4 Pizza (25 cm)	500	500	100	4 kw	0-450 °C	380/400V-50/60Hz	46 kg
8890.P5050.02	760	755	510		4+4 Pizza (25 cm)	500	500	100	6 kw	0-450 °C	380/400V-50/60Hz	65 kg
8890.P6262.01	880	850	430		4 Pizza (30 cm) 5 Pizza (25 cm)	620	620	150	5 kw	0-450 °C	380/400V-50/60Hz	65 kg
8890.P6262.02	880	850	760		4x4 Pizza (30 cm) 5x5 Pizza (25 cm)	620	620	150	10 kw	0-450 °C	380/400V-50/60Hz	115 kg
8890.P6292.02	880	1145	760		6+6 Pizza (30 cm)	620	920	150	6 kw	0-450 °C	380/400V-50/60Hz	85 kg
8890.P9262.01	1180	850	430		6 Pizza (30 cm)	920	620	150	6 kw	0-450 °C	380/400V-50/60Hz	85 kg
8890.P9262.02	1180	850	760		6+6 Pizza (30 cm)	920	620	150	12 kw	0-450 °C	380/400V-50/60Hz	145 kg
8890.P9292.01	1180	1145	430		9 Pizza (30 cm)	920	920	150	8 kw	0-450 °C	380/400V-50/60Hz	110 kg
8890.P9292.02	1180	1145	760		9+9 (30 cm)	920	920	150	16 kw	0-450 °C	380/400V-50/60Hz	190 kg

OTHER COOKING EQUIPMENT

58
Ranges
Over BenchCookers

59
Fryers
Floor Type Cookers

60
Bread Slicer Machine
Conveyor Toaster

61
Grill Toaster
Waffle Machines

62
Salamanders
Crepe Machine

63
Soup Bain Maries
Knife Sterilizers

65
Doner Grill Machines

70
Marine Kitchen
Equipment

Ranges

7865.90739.10 | **7865.12558.10**

40 MM INSULATION DOOR | NEW GENERATION BRASS BURNERS | 3 LEVEL CHROME COATED REMOVABLE RACK | FLAME FAILURE SAFETY

- Stainless steel top.
- Gas appliances supplied for use with natural or LPG gas, conversion jets supplied as standard.
- All major components are located at the front for easy maintenance.
- All stainless steel construction designed to avoid any infiltration.
- Top, sides, back, front panels and control consoles in stainless steel with satin scotchbrite finish.
- Standalone and base units are equipped with heavy duty 150 mm adjust able stainless feets.
- Each open burner has a pan support made from cast iron
- The oven is in AISI 430 stainless steel and equipped with two chromed container guides
- Gas heated standard oven with stainless steel micro perforated burners and self stabilizing flame positioned beneath the base plate.
- Oven chamber capacity 2/1 GN shelves which are removable and have three height settings.
- Static oven chamber can be controlled thermotatically between 100-300 °C

CODE	L	W	H	BURNER		OVEN	OVEN POWER	BURNER POWER	TOTAL POWER
7865.90739.10	900	730	885		6		7.2 kW	6 x 4,3 kW	33 kW
7865.12558.10	1200	550	850		5		5 kW	5 x 3 kW	20 kW

Over Bench Cooker

7865.80402.02 | **7865.80402.26**

CODE		L	W	H	TEMPERATURE	POWER	SUPPLY VOLTAGE	WEIGHT
7865.80402.02		750	400	120	-	2x4=8 kW	-	20 kg
7865.80402.26		750	400	120	450°	2x2.6=5.2 kW	400V / 3 NPE 50-60 Hz	12 kg
7865.40402.01		400	400	145	-	4 kW	-	11.45 kg
7865.40402.26		400	400	145	450°	2.6 kW	230V / NPE 50-60 Hz	8 kg

Fryers

7856.GN130.05

7856.EF10D.S0

CODE		L	W	W		POWER	TEMPERATURE	SUPPLY VOLTAGE	CAPACITY
7856.GN130.05		176	430	430	Without Tap	3 kW	190°	230V / NPE 50-60 Hz	GN 1/3 - 5 lt
7856.GN120.08		265	430	430	Without Tap	3 kW	190°	230V / NPE 50-60 Hz	GN 1/2 - 8 lt
7856.GN12S.08		265	430	430	Without Tap	6 kW	190°	400V / 3NPE 50-60 Hz	GN 1/2 - 8 lt
7856.GN23S.10		350	420	420	With Drain Tap	9 kW	190°	230V / NPE 50-60 Hz	GN 2/3 10 lt
7856.EF8D0.08		530	430	430	Without Tap	6 kW	190°	2x230V / NPE 50-60 Hz	GN 1/2 - 8+8 lt
7856.EF8DS.08		530	430	430	With Drain Tap	12 kW	190°	2x230V / NPE 50-60 Hz	GN 1/2 - 8+8 lt
7856.EF10D.S0		715	430	430	With Drain Tap	18 kW	190°	2x230V / NPE 50-60 Hz	GN 2/3 - 10+10 lt

Floor Type Cooker

7865.70705.44

Stainless Steel body	Available for LPG or Natural Gas
Safety gas valve with thermocouple	Long lasting
Easy to clean	Heavy duty top cast iron
Hygienic	Ergonomic design

CODE		L	W	W	POWER	WEIGHT		
7865.70705.44		850	700	500	NG: 32 kW / LPG: 24 kW	42 kg		Four Flame
7865.70705.21		700	700	500	14 kW	40 kg		Double Flame
7865.60605.21		600	600	500	14 kW	28 kg		Double Flame
7865.50505.22		500	500	500	10 kW	18 kg		Double Flame
7865.40405.21		400	400	500	4 kW	18 kg		Single Flame

Floor Type Cooker

7865.55555.01

Stainless steel body	6 position switch to control resistance
Easy to clean	Long life
Hygienic	Ergonomic design
Resistances are made of cast iron	

CODE		L	W	W	POWER	VOLTAGE	WEIGHT	TEMP.
7865.55555.01		550	550	500	5 kW	2x230V 50-60 Hz	33 kg	450°C

Floor Type Cooker Trolley

7959.95856.00	900	900	585	-	-	33 kg	-

Bread Slicer Machine

- Bread slice thickness is 16 mm
- Bread contacting surfaces are made of stainless steel
- Easy to transport with carrying handles wheels
- Adjustable pressing system according to height of bread
- Thanks to adjustment lever cuts bread without breaking into pieces
- Bread machine automatically stops after slicing process
- The body electrostatic coated.

CODE		L	W	H	VOLTAGE	POWER	WEIGHT
8830.S3016.00		650	820	1100	230V / NPE 50-60 Hz	0.37 kW	125 kg

8830.S3016.00

Conveyor Toaster

- Stainless Steel
- Serves bread slices both from front and back side
- Single or double-sided toasting
- Adjustable level of toaster
- Easy to clean the appliances
- Adjustable conveyor speed with rheostat
- Ventilated air circulation

CODE		L	W	H	VOLTAGE	CAPACITY	POWER	WEIGHT
7853.NM425.02		450	368	350	230V / NPE 50-60 Hz	400 Bread/h	1.8 kW	19 (± 5) kg
7853.NM600.02		450	500	350	230V / NPE 50-60 Hz	600 Bread/h	2.6 kW	19 (± 5) kg

7853.NM425.02

Grill Toaster

CE

8850.02745.DDR

8850.05530.DDR

CODE	OUTLET DIMENSION				INLET DIMENSION		POWER	SUPPLY VOLTAGE	WEIGHT
	L	W	H		L	W			
8850.02735.00R	395	360	225		270	350	2.5 kW	220 / 230 V.	26 kg.
8850.02735.DDR	395	360	225		270	350	2.5 kW	220 / 230 V.	26 kg.
8850.02735.IDR	395	360	225		270	350	2.5 kW	220 / 230 V.	25 kg.
8850.02740.DDR	485	365	235		270	450	3 kW	220 / 230 V.	34 kg.
8850.02745.00R	485	365	235		270	450	3 kW	220 / 230 V.	31 kg.
8850.02745.DDR	485	365	235		270	450	3 kW	220 / 230 V.	28 kg.
8850.02745.IDR	485	365	235		270	450	3 kW	220 / 230 V.	29 kg.
8850.05530.02IDR	540	305	230		300	550	3.5 kW	220 / 230 V.	56 kg.
8850.05530.02ODR	540	305	230		300	550	3.5 kW	220 / 230 V.	56 kg.
8850.05530.02R	540	305	230		300	550	3.5 kW	220 / 230 V.	31 kg.
8850.05530.DDR	540	305	230		300	550	3.5 kW	220 / 230 V.	30 kg.

Waffle Machines

	CODE	OUTLET DIMENSION				INLET DIMENSION			POWER	CAPACITY	VOLTAGE	WEIGHT
		L	W	H		L	W	H				
	8850.WKM25.00	300	320	300		80	160	50	2,2 kW	2 Portion	230 V	19 kg.
	8850.WKM25.02	580	320	300		80	160	50	2x2,2 kW	4 Portion	230 V	37 kg.
	8850.0WM25.00	300	320	300		Ø 160	-	-	2,2 kW	2 Portion	230 V	18 kg.
	8850.0WM25.02	580	320	300		Ø 160	-	-	2x2,2 kW	4 Portion	230 V	33 kg.
	8850.WF25E.00	300	320	300		Ø 210	-	-	2,2 kW	3 Portion	230 V	19 kg.
	8850.WF25E.02	580	320	300		Ø 210	-	-	2x2,2 kW	6 Portion	230 V	37 kg.

Salamander

7850.58575.70

Stainless steel body	Easy to clean
Ergonomic design	Long life

CODE		L	W	W	POWER	VOLTAGE	WEIGHT
7850.58575.70		600	580	580	3.2 kW	230V /50-60 Hz	52 kg

Salamander Ceramic Resistance

7850.N1.58575.70

Stainless steel construction	Chromium plated cooking grid 51x35,5 cm
2 individual controllable heating zones creates energy efficiency	Removable stainless steel fat collection tray under cooking grid
Digital control unit	Adjustable height lifting mechanism
5 level heating time	Can be stand alone or wall mounted
Automatic system that works when the plates are placed.	Easy access all major components for maintenance

CODE		L	W	W	POWER	VOLTAGE
7850.N1.58575.70		600	530	575	3.5 kW	230V /50-60 Hz

Crepe Machine

8850.0004.00R

CODE		L	W	W	SURFACE Ø	POWER	TEMP.	SUPPLY VOLTAGE	WEIGHT
8850.0004.00R		450	500	260	400	3,2 kW	50-300°C	230 V 50/60 Hz	20 kg
8850.02K40.02R		900	500	260	400	3+3 Kw	50-300°C	230 V 50/60 Hz	37 kg

GN Soup Bain - Maries

- External body is electrostatic coated
- It is easy to clean the appliances after using
- Control panel is established on the outside surface
- Keeps warm up to 60-70 °C

CODE		L	W	H	VOLTAGE	CAPACITY	
9479.10061.HK	⚡	410	305	305	230 V/NPE 50/60 Hz	10 l	9479.10061.HK

Knife Sterilizer (14 Knives)

- Stainless steel body and removable basket
- Ergonomic design
- Easy to clean
- Long life
- Mechanical timer stops when the door is opened
- Lockable

CODE		L	W	H	POWER	VOLTAGE	WEIGHT	
7912.N1.00014.00	⚡	472	120	575	0.008 kW	230 V/NPE 50/60 Hz	6.3 kg.	7912.N1.00014.00

01	6260.00072.58

02	6260.00072.57

03	6260.00072.581

04	6019.00007.01

05	2CBK.6019.00005.09

06	2CBK.6019.00005.16

07	2864.Z20.01710054.A.65

08	2179.250.01830183.0.01

Accessories

	CODE	TYPE	APPLIANCE		TYPE	CODE	APPLIANCE
01	6260.00072.58	BASKET	FRYER	05	2CBK.6019.00005.09	KNIFE RACK	KNIFE STERILIZER
02	6260.00072.57	BASKET	FRYER	06	2CBK.6019.00005.16	KNIFE RACK	KNIFE STERILIZER
03	6260.00072.581	BASKET	FRYER	07	2864.Z20.01710054.A.65	GRILL CLEANING COMB	GRILLS
04	6260.00072.581	WIRE GRID	GAS RANGE	08	2179.250.01830183.0.01	FLAME REDUCER	GAS RANGES

PRODUCT CODE	PRODUCT DESCRIPTION	POWER	L	W	H	MODEL	kW	Kcal/h	BTU/h	G20 (m^3/h)	G25 (m^3/h)	G30 (kg/h)
7865.40402.01	GAS COOKER	OSOG 4040 P	400	400	145	GAS	4	3.400	13.648	0,42	0,49	0,31
7865.80402.02	GAS COOKER	OSOG 4075 PA	750	400	145	GAS	8	6.880	27.296	0,84	0,98	0,63
7865.70705.44	FLOOR GAS COOKER	OYOG 7070 PS (NG)	850	700	500	GAS	32	27.520	109.184	3,38	3,90	-
7865.70705.44	FLOOR GAS COOKER	OYOG 7070 PS (LPG)	850	700	500	GAS	24	20.640	81.888	-	-	1,88
7865.70705.21	FLOOR GAS COOKER	OYOG 7070 P	700	700	500	GAS	14	12.040	47.768	1,48	1,72	1,10
7865.60605.21	FLOOR GAS COOKER	OYOG 6060 P	600	600	500	GAS	14	12.040	47.768	1,48	1,72	1,10
7865.50505.21	FLOOR GAS COOKER	OYOG 5050 P	500	500	500	GAS	4	3.440	13.648	0,42	0,49	0,31
7865.50505.22	FLOOR GAS COOKER	OYOG 5050 PS	500	500	500	GAS	10	8.600	34.120	1,05	1,23	0,78
7865.40405.21	FLOOR GAS COOKER	OYOG 4040 P	400	400	500	GAS	4	3.440	13.648	0,42	0,49	0,31
7890.20G21.03	CONVECTION OVEN	OKFG 202	1100	944	2011	GAS	40	34.400	136.480	4,23	4,91	3,14
7890.95701.03	CONVECTION OVEN	OKFG 101	700	950	1050	GAS	19	16.340	64.820	2,00	2,33	1,49
7890.20G21.03	CONVECTION OVEN	OKFG 102	1100	944	2011	GAS	30	25.800	102.360	3,15	3,69	2,34
7890.6G110.03	CONVECTION OVEN	OKFG 601	700	950	750	GAS	12	10.392	10.392	1,26	1,47	0,94

DONER GRILL MACHINES

Doner Grill Machines Upper Drive

- Stainless steel construction to meet hygiene standards
- Natural Gas or LPG compatible
- Heated by independently controlled infrared burners
- Dual-rail system allows meats to be broiled close, far or angled in relation to burner
- Right/left rotation by electric motor 1 rpm
- Flame failure gas-cut-out system for safety

Type	Typ 3GD			Typ 4GD			Typ 5GD		
Code	8859.00GD3.8T			8859.00GD4.8T			8859.00GD5.8T		
Gas Type	Natural Gas/ LPG			Natural Gas / LPG			Natural Gas / LPG		
Natural Gas Consumption	1.031 m3/h			1.375 m3/h			1.718 m3/h		
LPG Consuption	0.767 kg/h			1.023 kg/h			1.279 kg/h		
Dimension (LxWxH)	987 mm	450 mm	560 mm	1150 mm	450 mm	560 mm	1313 mm	450 mm	560 mm
Power	9.75 kW			13 kW			16,25 kW		
Skewer	736 mm			900 mm			1060 mm		
Meat Capacity	40 kg			80 kg			120 kg		
Burner	3			4			5		
Max. Meat Mountage Height	450 mm			630 mm			810 mm		
Weight	24 kg			28 kg			32 kg		

All upper drive models have octagonal fat tray

8859.00GD4.8T

Doner Grill Machines Lower Drive

- Stainless steel construction to meet hygiene standards
- Natural Gas or LPG compatible
- Heated by independently controlled infrared burners
- Movable heater housing for controlled roasting
- Removable fat collection drawer
- Right/left rotation by electric motor 1 rpm
- Flame failure gas-cut-out system for safety
- Heating system under the monoblock grease pan for keeping cooked meat at serving temperatures

Type	Typ 3GUD W			Typ 4GUD W			Typ 5GUD W		
Code	8859.0GUD3.W0			8859.0GUD4.W0			8859.0GUD5.W0		
Gas Type	Natural Gas / LPG			Natural Gas / LPG			Natural Gas / LPG		
Natural Gas Consumption	1.031 m3/h			1.375 m3/h			1.718 m3/h		
LPG Consuption	0.767 kg/h			1.023 kg/h			1.279 kg/h		
Dimension (LxWxH)	736 mm	530 mm	650 mm	1070 mm	530 mm	650 mm	1230 mm	530 mm	650 mm
Power	9.75 kW			13 kW			16,25 kW		
Skewer	736 mm			900 mm			1060 mm		
Meat Capacity	50 kg			90 kg			110 kg		
Burner	3			4			5		
Max. Meat Mountage Height	450 mm			630 mm			810 mm		
Weight	27 kg			33 kg			39 kg		

With resistance heater at the bottom of fat tray

8859.00GD5.8T

Doner Grill Machines Upper Drive

Stainless steel construction to meet hygiene standards

Heated by independently controlled heating elements behind ceramic glass

Dual-rail system allows meats to be broiled close, far or angled in relation to burner

Right/left rotation by electric motor 1 rpm

Type	Typ 3E			Typ 4E			Typ 4E		
Code	8859.000E3.8T			8859.000E4.8T			8859.000E5.8T		
Dimension (LxWxH)	987 mm	450 mm	560 mm	1150 mm	450 mm	560 mm	1312 mm	450 mm	560 mm
Power	5.4 kW			7.2 kW			9 kW		
Voltage	400/230 V			400/230 V			400/230 V		
Skewer	736 mm			900 mm			1060 mm		
Meat Capacity	40 kg			80 kg			120 kg		
Burner	3			4			5		
Max. Meat Mountage Height	450 mm			630 mm			810 mm		
Weight	27 kg			30 kg			32 kg		

All upper drive models have octagonal fat tray

8859.000E4.8T

Doner Grill Machines Lower Drive

Stainless steel construction to meet hygiene standards

Heated by independently controlled heating elements behind ceramic glass

Movable heater housing for controlled roasting

Right/left rotation by electric motor 1 rpm

Heating system under the monoblock grease pan for keeping cooked meat at serving temperatures

Type	Typ 3EU W			Typ 4EU W			Typ 5EU W		
Code	8859.00EU3.W0			8859.00EU4.W0			8859.00EU5.W0		
Dimension (LxWxH)	780 mm	530 mm	650 mm	1070 mm	530 mm	650 mm	1230 mm	530 mm	650 mm
Power	5.4 kW			7.2 kW			9 kW		
Voltage	400/230 V			400/230 V			400/230 V		
Skewer	736 mm			900 mm			1060 mm		
Meat Capacity	50 kg			90 kg			120 kg		
Burner	3			4			5		
Max. Meat Mountage Height	450 mm			630 mm			810 mm		
Weight	28 kg			34 kg			40 kg		

With resistance heater at the bottom of fat tray

8859.00EU5.W0

Doner Grill Machines V Type Lower Drive

CE

- Stainless steel construction to meet hygiene standards
- Heated by independently controlled burners behind ceramic glass
- Movable heater housing for controlled roasting
- Right/left rotation by electric motor 1 rpm
- Natural Gas or LPG compatible
- Flame failure gas-cut-out system for safety
- Transportable with trolley for the preparation and cooking period
- Robax Thermal Glass

Type	44GUD-V-CA			55GUD-V-CA		
Code	8859.GUD44.CVA			8859.GUD55.CVA		
Gas Type	Natural Gas / LPG			Natural Gas / LPG		
Natural Gas Consumption	2.3264 m3			2.908 m3		
LPG Consuption	1.7312 kg/h			2.1643 kg/h		
Dimension (LxWxH)	996 mm	1130 mm	1740 mm	996 mm	1130 mm	1898 mm
Power	22 kW			27.5 kW		
Voltage	-			-		
Skewer	900 mm			1060 mm		
Meat Capacity	150 kg			200 kg		
Burner	8			10		
Max. Meat Mountage Height	630 mm			810 mm		
Weight	32 kg			18 kg		

With resistance heater at the bottom of fat tray

8859.GUD55.CVA

Doner Grill Machines V Type Lower Drive

CE

- Stainless steel construction to meet hygiene standards
- Heated by independently controlled burners behind ceramic glass
- Movable heater housing for controlled roasting
- Right/left rotation by electric motor 1 rpm
- Natural Gas or LPG compatible
- Flame failure gas-cut-out system for safety
- Transportable with trolley for the preparation and cooking period
- Robax Thermal Glass

Type	44GUD-V			55GUD-V		
Code	8859.GUD44.V0			8859.GUD55.V0		
Gas Type	Natural Gas / LPG			Natural Gas / LPG		
Natural Gas Consumption	2.3264 m3			2.908 m3		
LPG Consuption	1.7312 kg/h			2.1643 kg/h		
Dimension (LxWxH)	800 mm	920 mm	1290 mm	800 mm	920 mm	1290 mm
Power	22 kW			27.5 kW		
Voltage	-			-		
Skewer	900 mm			1060 mm		
Meat Capacity	150 kg			200 kg		
Burner	8			10		
Max. Meat Mountage Height	630 mm			810 mm		
Weight	32 kg			33 kg		

With resistance heater at the bottom of fat tray

8859.GUD44.V0

Doner Grill Machines Lower Drive

- Stainless steel construction to meet hygiene standards
- Natural Gas or LPG compatible
- Heated by independently controlled infrared burners
- Movable heater housing for controlled roasting
  LOCK SYSTEM FOR MOVABLE HEATER HOUSING
- Removable fat collection drawer
- Right/left rotation by electric motor 1 rpm
- Flame failure gas-cut-out system for safety

Type	Typ 4GUD			Typ 4EU		
Code	8859.0GUD3.W0			8859.00EU4.E0		
Gas Type	Natural Gas / LPG			-		
Natural Gas Consumption	1.375 m3/h			-		
LPG Consuption	1.023 kg/h			-		
Dimension (LxWxH)	1100 mm	530 mm	650 mm	1100 mm	530 mm	650 mm
Power	13kW			7.2 kW		
Voltage	-			400/230 V		
Skewer	900 mm			900 mm		
Meat Capacity	80 kg			80 kg		
Burner	4			4		
Max. Meat Mountage Height	630 mm			630 mm		
Weight	32 kg			33 kg		

With resistance heater at the bottom of fat tray

8859.0GUD4.W0

8859.00EU4.E0

Doner Slicing Machine

8350.OZT10.00

- Ergonomically designed
- Adjustable thickness
- Suitable for all kinds of doner meat
- Waterproof
- Cleanable without dismantling
- Circling: 4500 rpm

CODE		L	W	W	POWER	KNIFE	VOLTAGE	WEIGHT
8350.OZT10.00		290	130	140	0.1 kW	Ø 100 mm	220 V / 24 V	900 g.

Doner Grill Machine Motor

2859.D30.GR002.01

Construction of product is made of stainless steel

CODE		POWER	VOLTAGE
2859.D30.GR002.01		3.7 Watt	230V /50-60 Hz

All appliances can be produced to work properly in all kinds of ships.

Ranges for Marine Kitchen

7865.N1.80908.11G

7865.N1.80708.02G

	CODE	L	W	H	BURNER		CABINET	OVEN	OVEN DIMENSION	OVEN POWER	BURNER POWER	TOTAL POWER	VOLTAGE
	7865.N1.80908.11G	800	900	850		4	-		GN-2/1	6 kW	4x4 kW	22 kW	440V / 50-60 Hz
	7865.N1.80708.02G	800	700	850		6	-		GN-2/1	6 kW	4x2.6 kW	16.4 kW	440V / 50-60 Hz

Salamander

7850.58575.70G

Stainless steel body	Easy to clean
Ergonomic design	Long life

CODE		L	W	W	POWER	VOLTAGE	WEIGHT
7850.58575.70G		600	580	580	3.2 kW	440V / 50-60 Hz	52 kg

COLD UNITS

84 S-Series Refrigerators

86 S-Series Freezers

88 K-Series Refrigerators

90 K-Series Freezers

92 Slim Type Refrigerator & Freezer

94 700 Serie Counter Type Refrigerators

96 700 Serie Counter Type Freezers

98 600 Serie Counter Type Refrigerators

99 600 Serie Counter Type Freezers

100 700 Serie Counter Type Refrigerator with Basin

101 Counter Type Refrigerator Pizza or Salad Unit Counter Type Refrigerator with Sink Unit

102 Under Counter Type Refrigerator

103 Under Counter Type Freezers

104 Cold Rooms

ozti REFRIGERATORS

FEATURES AFFECTING HIGH PERFORMANCE

Optimisied Cooling System

Intelligent Defrost Sytem

Efficient Refrigerant

Insulation

High Efficiency Compressor and Fans

Wire Frame Conderser

Maintenance Saving

Offer the highest in performance and efficiency.

Provide low energy consumption and cost benefits compared to standard refrigerators.

Save energy save the WORLD

Energy conservation is an important consideration factored into the design and production of Ozti refrigerator units. Our high-density, environmentally friendly, HFC-Free Polyurethane insulation allows our customers to benefit from reduced energy consumption costs.
Through this technology temperature increase is effectively minimized during defrost periods.

eco FRIENDLY

Together with the eco-friendly refrigerant (R134A/R404A) and high performance compressor, the carbon emission is minimized and cooling efficiency is maximized.
Standard: HC Refrigerant (R290)

Features of Intelligent Defrost System (IDS)

— Evaluates frost accumulation on the evaporator and determines whether or not the accumulation is significant enough to allow defrosting to take place.
— Icing is kept under constant control. During intensive use, it provides high-performance in cooling.
— Reduces the risk of food spoilage due to frost.
— Provides higher efficiency than traditional defrost systems working in non-intensive use.
— Employs a series of sophisticated algorithms to ensure the evaporator is providing maximum efficiency to the system through individual components such as high/low temperature alarm, condenser temperature alarm recording/monitoring, humidity control, and MODBUS support features.
— It supports centrally controlled network data and alarm systems.

Self closing below 90°

- 40-42 kg/m^3 density environment friendly
- HFC-Free high pressurised polyurethane insulation
- 60 mm thickness for counter-type models

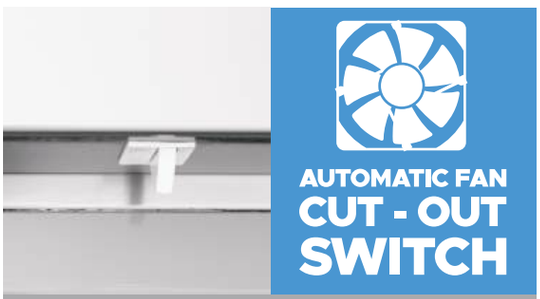

Minimized heat loss against frequent door usage

The lowest energy consumption (internal neon light on glass models)

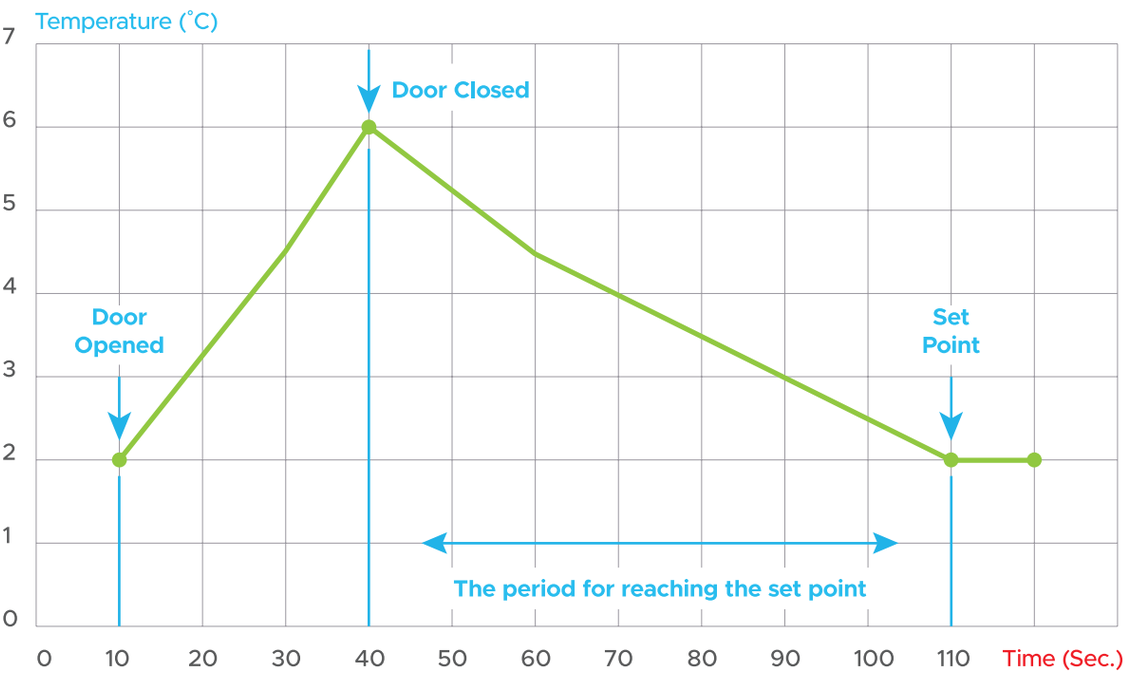

In high ambient temperatures, frequent door usage reduces the storage time of food. It is extremely important to reach the optimum internal temperature quickly to maintain the freshness of food products.

Cool with Care

Our refrigerator units meet the highest standards for hygiene. Deep - drawn inner liners made of stainless steel maximize hygiene and make cleaning easy. Rounded corners are another key feature for easy cleaning and a more hygienic inner structure.

Curved Base Corners

Mono-block base plate for easy cleaning

Handle

- Ergonomic handle design
- Side by side installation

Radiused Inner Linnes

- Upright GN 2/1 capacity, (except counter type GN 1/1 capacity)
- 22 liners with 57m height deep-drawn inner liners provides the highest hygiene standarts
- Innovative design of inner liners for tilt-free containers
- 40 kg shelf load

Stainless Steel Legs

150 mm high adjustable stainless steel!

Removable Gaskets

Triple insulated, wide magnetic gaskets

High Quality Stainless Steel

304 S/S interior and exterior (front and sides)

HACCP

DIGITAL CONTROL PANEL

- High/low temperature alarm, open door alarm and high condenser temperature alarm display and saving
- High condenser temperature alarm
- Basic humidity control (High, med., low)
- MODBUS protocol
- Enables networking with central data logging and alarm systems.

Freeze your maintenance budget
Wire Frame Condenser

Dust-free wire condenser with a large surface area provides higher performance and lower maintenance costs.

High Internal Volume

Mono-block cooling system with
built-in evaporator Evaporator-free cabin

Mono-block refrigeration unit

- Tropicalised cooling system +43°C, 65% relative humidity
- Low energy consumption!
- Large surface area of the evaporator!
- ESP painting against corrosion
- Ease of maintenance
- CFC-Free cooling gas R134A/R404A
- Optional: HC Refrigerant (R290)

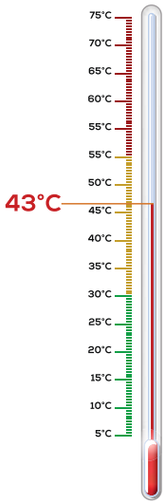

sustainable freshness

Tropicalized cooling system (+43 C°, 65% relative humidity) keeps your foods fresh. Intelligent Defrost System increases performance. Mono-block cabinet, Mono-block refrigeration system, Compact design with hidden evaporator and 80 mm insulated walls (only for cabinets) provide higher performance

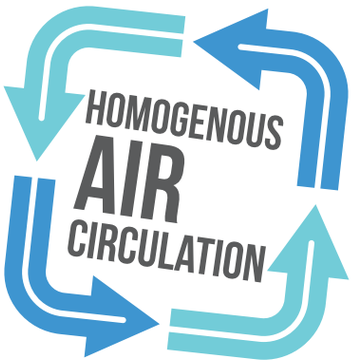

Uniform air circulation with
air distribution channel

Flexibility

Reversible doors

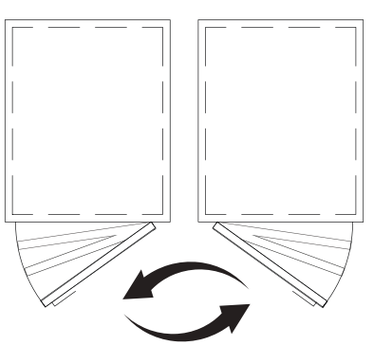

IP2X water protection

Full frontal water-proof design.

Heavy Duty Runners

Anti-tilt runners for drawers

S - SERIES

GN 2/1 SIZE
700-1400 LT
REFRIGERATOR

OUTER BODY
AISI 304
INSIDE CABINET
AISI 304

TEMPERATURE
-2 / +8 °C

OPTIONAL ACCESSORIES

- REMOTE CONDENSING UNIT
- WIFI MONITORING KIT
- BLUETOOTH MONITORING KIT
- RS 485 / RS 232 ADAPTER
- GRID SHELF
- DOOR/DRAWER LOCK
- H:150MM. / Ø:125MM. CASTER

	REFRIGERANT (R134A)	REFRIGERANT (R290)		ENERGY EFFICIENCY (R290)	L	W/P	H	CAPACITY	INSULATION	SHELF	POWER	VOLTAGE	WEIGHT
	7919.06NMV.00	7219.06NMV.00		C	690	840	2100	700 lt	80 mm	3	0.21 kW	220-240 / 50-60 Hz 230V / 50 Hz	116 kg
	7919.12NMV.00	7219.12NMV.00		D	1380	840	2100	1400 lt	80 mm	6	0.37 kW	220-240 / 50-60 Hz 230V / 50 Hz	194 kg
	7919.06NMV.10	7219.06NMV.10		C	690	840	2100	700 lt	80 mm	3	0.21 kW	220-240 / 50-60 Hz 230V / 50 Hz	120 kg
	7919.12NMV.10	7219.12NMV.10		D	1380	840	2100	1400 lt	80 mm	6	0.37 kW	220-240 / 50-60 Hz 230V / 50 Hz	201 kg
	7919.06NMV.01	7219.06NMV.01		D	690	840	2100	700 lt	80 mm	3	0.21 kW	220-240 / 50-60 Hz 230V / 50 Hz	123 kg
	7919.12NMV.01	7219.12NMV.01		E	1380	840	2100	1400 lt	80 mm	6	0.37 kW	220-240 / 50-60 Hz 230V / 50 Hz	208 kg
	7919.06NMV.11	7219.06NMV.11		D	690	840	2100	700 lt	80 mm	3	0.21 kW	220-240 / 50-60 Hz 230V / 50 Hz	124 kg
	7919.12NMV.11	7219.12NMV.11		E	1380	840	2100	1400 lt	80 mm	6	0.37 kW	220-240 / 50-60 Hz 230V / 50 Hz	211 kg

S - SERIES

GN 2/1 SIZE

700-1400 LT

REFRIGERATOR

OUTER BODY

AISI 430

INSIDE CABINET

AISI 304

TEMPERATURE

-2 / +8 °C

OPTIONAL ACCESSORIES

- REMOTE CONDENSING UNIT
- WIFI MONITORING KIT
- BLUETOOTH MONITORING KIT
- RS 485 / RS 232 ADAPTER
- GRID SHELF
- DOOR/DRAWER LOCK
- H:150MM. / Ø:125MM. CASTER

06

	REFRIGERANT			ENERGY EFFICIENCY (R290)	L	W/P	H	CAPACITY	INSULATION	SHELF	POWER	VOLTAGE	WEIGHT
	(R134A)	(R290)											
	79E4.06NMV.00	72E4.06NMV.00		C	690	840	2100	700 lt	80 mm	3	0.21 kW 0.21 kW	220-240 / 50-60 Hz 230V / 50 Hz	116 kg
	79E4.12NMV.00	72E4.12NMV.00		D	1380	840	2100	1400 lt	80 mm	6	0.37 kW 0.37 kW	220-240 / 50-60 Hz 230V / 50 Hz	194 kg
	79E4.06NMV.10	72E4.06NMV.10		C	690	840	2100	700 lt	80 mm	3	0.21 kW 0.19 kW	220-240 / 50-60 Hz 230V / 50 Hz	120 kg
	79E4.12NMV.10	72E4.12NMV.10		D	1380	840	2100	1400 lt	80 mm	6	0.37 kW 0.35 kW	220-240 / 50-60 Hz 230V / 50 Hz	201 kg
	79E4.06NMV.01	72E4.06NMV.01		D	690	840	2100	700 lt	80 mm	3	0.21 kW 0.19 kW	220-240 / 50-60 Hz 230V / 50 Hz	123 kg
	79E4.12NMV.01	72E4.12NMV.01		E	1380	840	2100	1400 lt	80 mm	6	0.37 kW 0.35 kW	220-240 / 50-60 Hz 230V / 50 Hz	208 kg
	79E4.06NMV.11	72E4.06NMV.11		D	690	840	2100	700 lt	80 mm	3	0.21 kW 0.19 kW	220-240 / 50-60 Hz 230V / 50 Hz	124 kg
	79E4.12NMV.11	72E4.12NMV.11		E	1380	840	2100	1400 lt	80 mm	6	0.37 kW 0.35 kW	220-240 / 50-60 Hz 230V / 50 Hz	211 kg

S - SERIES

GN 2/1 SIZE
700-1400 LT
FREEZERS

OUTER BODY
AISI 304
INSIDE CABINET
AISI 304

TEMPERATURE
-5 / -22 °C

OPTIONAL ACCESSORIES

- REMOTE CONDENSING UNIT
- WIFI MONITORING KIT
- BLUETOOTH MONITORING KIT
- RS 485 / RS 232 ADAPTER
- GRID SHELF
- DOOR/DRAWER LOCK
- H:150MM. / Ø:125MM. CASTER

	REFRIGERANT			ENERGY EFFICIENCY (R290)	L	W/P	H	CAPACITY	INSULATION	SHELF	POWER	VOLTAGE	WEIGHT
	(R404A)	(R290)											
	7919.06LMV.00	7219.06LMV.00		D	690	840	2100	700 lt	80 mm	3	0.57 kW	220-240 / 50-60 Hz 230V / 50 Hz	122 kg
	7919.12LMV.00	7219.12LMV.00		D	1380	840	2100	1400 lt	80 mm	6	0.80 kW	220-240 / 50-60 Hz 230V / 50 Hz	203 kg
	7919.06LMV.10	7219.06LMV.10		E	690	840	2100	700 lt	80 mm	3	0.57 kW	220-240 / 50-60 Hz 230V / 50 Hz	122 kg
	7919.12LMV.10	7219.12LMV.10		E	1380	840	2100	1400 lt	80 mm	6	0.80 kW	220-240 / 50-60 Hz 230V / 50 Hz	203 kg

S - SERIES

GN 2/1 SIZE
700-1400 LT
FREEZERS

OUTER BODY
AISI 430
INSIDE CABINET
AISI 304

TEMPERATURE
-5 / -22 °C

OPTIONAL ACCESSORIES

- REMOTE CONDENSING UNIT
- WIFI MONITORING KIT
- BLUETOOTH MONITORING KIT
- RS 485 / RS 232 ADAPTER
- GRID SHELF
- DOOR/DRAWER LOCK
- H:150MM. / Ø:125MM. CASTER

06

	REFRIGERANT			ENERGY EFFICIENCY (R290)	L	W/P	H	CAPACITY	INSULATION	SHELF	POWER	VOLTAGE	WEIGHT
	(R404A)	(R290)											
	79E4.06LMV.00	72E4.06LMV.00		D	690	840	2100	700 lt	80 mm	3	0.57 kW	220-240 / 50-60 Hz 230V / 50 Hz	122 kg
	79E4.12LMV.00	72E4.12LMV.00		D	1380	840	2100	1400 lt	80 mm	6	0.80 kW	220-240 / 50-60 Hz 230V / 50 Hz	203 kg
	79E4.06LMV.10	72E4.06LMV.10		E	690	840	2100	700 lt	80 mm	3	0.57 kW	220-240 / 50-60 Hz 230V / 50 Hz	122 kg
	79E4.12LMV.10	72E4.12LMV.10		E	1380	840	2100	1400 lt	80 mm	6	0.80 kW	220-240 / 50-60 Hz 230V / 50 Hz	203 kg

K - SERIES

GN 2/1 SIZE
700-1400 LT
REFRIGERATOR

OUTER BODY
AISI 304
INSIDE CABINET
AISI 304

TEMPERATURE
0 / +10 °C

OPTIONAL ACCESSORIES

- REMOTE CONDENSING UNIT
- WIFI MONITORING KIT
- BLUETOOTH MONITORING KIT
- RS 485 / RS 232 ADAPTER
- GRID SHELF
- DOOR/DRAWER LOCK
- H:150MM. / Ø:125MM. CASTER

	REFRIGERANT (R134A)	REFRIGERANT (R290)		ENERGY EFFICIENCY (R290)	L	W/P	H	CAPACITY	INSULATION	SHELF	POWER	VOLTAGE	WEIGHT
	79K3.07NMV.00	72K3.07NMV.00		C	654	830	2000	700 lt	60 mm	3	0.21 kW 0.19 kW	220-240 / 50-60 Hz 230V / 50 Hz	107 kg
	79K3.14NMV.00	72K3.14NMV.00		C	1344	830	2000	1400 lt	60 mm	6	0.37 kW 0.35 kW	220-240 / 50-60 Hz 230V / 50 Hz	176 kg
	79K3.07NMV.10	72K3.07NMV.10		C	654	830	2000	700 lt	60 mm	3	0.21 kW 0.19 kW	220-240 / 50-60 Hz 230V / 50 Hz	107 kg
	79K3.14NMV.10	72K3.14NMV.10		C	1344	830	2000	1400 lt	60 mm	6	0.37 kW 0.35 kW	220-240 / 50-60 Hz 230V / 50 Hz	171 kg
	79K3.07NMV.01	72K3.07NMV.01		D	654	830	2000	700 lt	60 mm	3	0.21 kW 0.19 kW	220-240 / 50-60 Hz 230V / 50 Hz	114 kg
	79K3.14NMV.01	72K3.14NMV.01		D	1344	830	2000	1400 lt	60 mm	6	0.37 kW 0.35 kW	220-240 / 50-60 Hz 230V / 50 Hz	185 kg
	79K3.07NMV.11	72K3.07NMV.11		D	654	830	2000	700 lt	60 mm	3	0.21 kW 0.19 kW	220-240 / 50-60 Hz 230V / 50 Hz	114 kg
	79K3.14NMV.11	72K3.14NMV.11		D	1344	830	2000	1400 lt	60 mm	6	0.37 kW 0.35 kW	220-240 / 50-60 Hz 230V / 50 Hz	185 kg

K - SERIES

GN 2/1 SIZE
700-1400 LT
REFRIGERATOR

OUTER BODY
AISI 430
INSIDE CABINET
AISI 304

TEMPERATURE
0 / +10 °C

OPTIONAL ACCESSORIES

- REMOTE CONDENSING UNIT
- WIFI MONITORING KIT
- BLUETOOTH MONITORING KIT
- RS 485 / RS 232 ADAPTER
- GRID SHELF
- DOOR/DRAWER LOCK
- H:150MM. / Ø:125MM. CASTER

06

	REFRIGERANT (R134A)	REFRIGERANT (R290)		ENERGY EFFICIENCY (R290)	L	W/P	H	CAPACITY	INSULATION	SHELF	TEMP.	VOLTAGE	WEIGHT
	79K4.07NMV.00	72K4.07NMV.00		C	654	830	2000	700 lt	60 mm	3	0.21 kW 0.19 kW	220-240 / 50-60 Hz 230V / 50 Hz	107 kg
	79K4.14NMV.00	72K4.14NMV.00		C	1344	830	2000	1400 lt	60 mm	6	0.37 kW 0.35 kW	220-240 / 50-60 Hz 230V / 50 Hz	176 kg
	79K4.07NMV.10	72K4.07NMV.10		C	654	830	2000	700 lt	60 mm	3	0.21 kW 0.19 kW	220-240 / 50-60 Hz 230V / 50 Hz	107 kg
	79K4.14NMV.10	72K4.14NMV.10		C	1344	830	2000	1400 lt	60 mm	6	0.37 kW 0.35 kW	220-240 / 50-60 Hz 230V / 50 Hz	171 kg
	79K4.07NMV.01	72K4.07NMV.01		D	654	830	2000	700 lt	60 mm	3	0.21 kW 0.19 kW	220-240 / 50-60 Hz 230V / 50 Hz	114 kg
	79K4.14NMV.01	72K4.14NMV.01		D	1344	830	2000	1400 lt	60 mm	6	0.37 kW 0.35 kW	220-240 / 50-60 Hz 230V / 50 Hz	185 kg
	79K4.07NMV.11	72K4.07NMV.11		D	654	830	2000	700 lt	60 mm	3	0.21 kW 0.19 kW	220-240 / 50-60 Hz 230V / 50 Hz	114 kg
	79K4.14NMV.11	72K4.14NMV.11		D	1344	830	2000	1400 lt	60 mm	6	0.37 kW 0.35 kW	220-240 / 50-60 Hz 230V / 50 Hz	185 kg

K - SERIES

GN 2/1 SIZE
700-1400 LT
FREEZERS

OUTER BODY
AISI 304
INSIDE CABINET
AISI 304

TEMPERATURE
-5 / -22 °C

OPTIONAL ACCESSORIES

- REMOTE CONDENSING UNIT
- WIFI MONITORING KIT
- BLUETOOTH MONITORING KIT
- RS 485 / RS 232 ADAPTER
- GRID SHELF
- DOOR/DRAWER LOCK
- H:150MM. / Ø:125MM. CASTER

	REFRIGERANT			ENERGY EFFICIENCY (R290)	L	W/P	H	CAPACITY	INSULATION	SHELF	TEMP.	VOLTAGE	WEIGHT
	(R404A)	(R290)											
	79K3.07LMV.00	72K3.07LMV.00		D	654	830	2000	700 lt	60 mm	3	0.57 kW 0.50 kW	220-240 / 50-60 Hz 230V / 50 Hz	122 kg
	79K3.14LMV.00	72K3.14LMV.00		D	1344	830	2000	1400 lt	60 mm	6	0.80 kW 0.78 kW	220-240 / 50-60 Hz 230V / 50 Hz	203 kg
	79K3.07LMV.10	72K3.07LMV.10		E	654	830	2000	700 lt	60 mm	3	0.57 kW 0.50 kW	220-240 / 50-60 Hz 230V / 50 Hz	122 kg
	79K3.14LMV.10	72K3.14LMV.10		E	1344	830	2000	1400 lt	60 mm	6	0.80 kW 0.78 kW	220-240 / 50-60 Hz 230V / 50 Hz	203 kg

K - SERIES

GN 2/1 SIZE
700-1400 LT
FREEZERS

OUTER BODY
AISI 430
INSIDE CABINET
AISI 304

TEMPERATURE
-5 / -22 °C

OPTIONAL ACCESSORIES

- REMOTE CONDENSING UNIT
- WIFI MONITORING KIT
- BLUETOOTH MONITORING KIT
- RS 485 / RS 232 ADAPTER
- GRID SHELF
- DOOR/DRAWER LOCK
- H:150MM. / Ø:125MM. CASTER

06

	REFRIGERANT			ENERGY EFFICIENCY (R290)	L	W/P	H	CAPACITY	INSULATION	SHELF	TEMP.	VOLTAGE	WEIGHT
	(R404A)	(R290)											
	79K4.07LMV.00	72K4.07LMV.00		D	654	830	2000	700 lt	60 mm	3	0.57 kW 0.50 kW	220-240 / 50-60 Hz 230V / 50 Hz	122 kg
	79K4.14LMV.00	72K4.14LMV.00		D	1344	830	2000	1400 lt	60 mm	6	0.80 kW 0.78 kW	220-240 / 50-60 Hz 230V / 50 Hz	203 kg
	79K4.07LMV.10	72K4.07LMV.10		E	654	830	2000	700 lt	60 mm	3	0.57 kW 0.50 kW	220-240 / 50-60 Hz 230V / 50 Hz	122 kg
	79K4.14LMV.10	72K4.14LMV.10		E	1344	830	2000	1400 lt	60 mm	6	0.80 kW 0.78 kW	220-240 / 50-60 Hz 230V / 50 Hz	203 kg

SLIM TYPE

GN 2/1 SIZE

REFRIGERATOR

WITH SINGLE DOOR AND 3 DRAWERS

OUTER BODY

AISI 304

INSIDE CABINET

AISI 304

OPTIONAL ACCESSORIES

- REMOTE CONDENSING UNIT
- WIFI MONITORING KIT
- BLUETOOTH MONITORING KIT
- RS 485 / RS 232 ADAPTER
- GRID SHELF
- DOOR/DRAWER LOCK
- H:150MM. / Ø:125MM. CASTER

06

	REFRIGERANT (COOLER)		ENERGY EFFICIENCY	L	W/P	H	CAPACITY	INSULATION	SHELF	POWER	VOLTAGE	WEIGHT
	7919.06NMV.13		-	690	840	2100	700 lt	80 mm	3	0.60 kW	220-240 / 50-60 Hz	124 kg

REMOTE CONDENSING UNIT

CODE	ADDITIONAL OPTIONS
2919.RMTCU.N1	Up to 400 W Remote condensing unit with R134a including installation equipments for 15m max. REMOTE UNIT “A”
2919.RMTCU.N3	Up to 700 W Remote condensing unit with R134a including installation equipments for 15m max. REMOTE UNIT “B”
2919.RMTCU.L1	Up to 500 W Remote condensing unit with R404a including installation equipments for 15m max. REMOTE UNIT “C”
2919.RMTVU.L3	Up to 800 W Remote condensing unit with R404a including installation equipments for 15m max. REMOTE UNIT “D”

GRID SHELF

CODE	ADDITIONAL OPTIONS
6268.00019.36	Wifi Monitoring Kit with EV3294 Controller
6268.00019.31	GN 2/1 Stainless steel grid shelf. GN 2/1 SHELF SS
2919.04060.00	Shelf for EN40X60 trays / Dimensions : 40x60 cm Shelves : 600 NMV-K: 10 Pieces - 1200 NMV-K: 20 Pieces

RS 485 / RS 232 ADAPTER

CODE	ADDITIONAL OPTIONS
6234.00009.42	RS485/RS232 adapter for BMS Systems RS485 / RS232 ADAPTER

MEAT RACK

CODE	ADDITIONAL OPTIONS
2919.ETASK.06	Meat Rack-600
2919.ETASK.12	Meat Rack-1200

WIFI MONITORING KIT

CODE	ADDITIONAL OPTIONS
2919.EPOCA.00	Wifi Monitoring Kit with EV3294 Controller
2919.EPOCA.0J	Wifi Monitoring Kit with Jumbo Controller

BLUETOOTH MONITORING KIT

CODE	ADDITIONAL OPTIONS
2919.BLUET.00	Bluetooth Monitoring Kit with EV3294 Controller

H:150MM. / Ø:125MM. CASTER

CODE	ADDITIONAL OPTIONS
2920.93570.25	4 Pieces Casters Set (2A+2B) h=150mm Ø=125mm. A: With Brakes / B: Without Brakes

DOOR/DRAWER LOCK

CODE	ADDITIONAL OPTIONS
2919.KLTMJ.00	Optional Key Locks for each door/drawer LOCK

700 SERIE

GN 1/1 SIZE COUNTER TYPE REFRIGERATOR

OUTER BODY
AISI 304
INSIDE CABINET
AISI 304

TEMPERATURE
-2 / +8 °C

OPTIONAL ACCESSORIES

- REMOTE CONDENSING UNIT
- WIFI MONITORING KIT
- BLUETOOTH MONITORING KIT
- GLASS DOOR
- GN 1/1 DRAWERS
- GRID SHELF
- H:150MM. / Ø:125MM. CASTER

	REFRIGERANT (R134A)	REFRIGERANT (R290)		ENERGY EFFICIENCY (R290)	L	W/P	H	CAPACITY	INSULATION	SHELF	POWER.	VOLTAGE	WEIGHT
	79E3.27NMV.00	72E3.27NMV.00		C	700	1314	850	301 lt	60 mm	2	0.21 kW 0.18 kW	220-240 / 50-60 Hz 230V / 50 Hz	95 kg
	79E3.37NMV.00	72E3.37NMV.00		C	700	1780	850	457 lt	60 mm	3	0.30 kW 0.24 kW	220-240 / 50-60 Hz 230V / 50 Hz	128 kg
	79E3.47NMV.00	72E3.47NMV.00		C	700	2246	850	625 lt	60 mm	4	0.36 kW 0.28 kW	220-240 / 50-60 Hz 230V / 50 Hz	159 kg
	79E3.27NMV.01	72E3.27NMV.01		D	700	1314	850	301 lt	60 mm	2	0.21 kW 0.18 kW	220-240 / 50-60 Hz 230V / 50 Hz	99 kg
	79E3.37NMV.01	72E3.37NMV.01		D	700	1780	850	457 lt	60 mm	3	0.30 kW 0.24 kW	220-240 / 50-60 Hz 230V / 50 Hz	134 kg
	79E3.47NMV.01	72E3.47NMV.01		D	700	2246	850	625 lt	60 mm	4	0.36 kW 0.28 kW	220-240 / 50-60 Hz 230V / 50 Hz	167 kg
	79E3.27NMV.02	72E3.27NMV.02		C	700	1314	850	301 lt	60 mm	-	0.21 kW 0.18 kW	220-240 / 50-60 Hz 230V / 50 Hz	110 kg
	79E3.37NMV.02	72E3.37NMV.02		C	700	1780	850	457 lt	60 mm	-	0.28 kW 0.22 kW	220-240 / 50-60 Hz 230V / 50 Hz	151 kg
	79E3.47NMV.02	72E3.47NMV.02		D	700	2246	850	625 lt	60 mm	-	0.35 kW 0.28 kW	220-240 / 50-60 Hz 230V / 50 Hz	189 kg
	79E3.27NMV.03	72E3.27NMV.03		C	700	1314	850	301 lt	60 mm	-	0.21 kW 0.18 kW	220-240 / 50-60 Hz 230V / 50 Hz	117 kg
	79E3.37NMV.03	72E3.37NMV.03		C	700	1780	850	457 lt	60 mm	-	0.28 kW 0.22 kW	220-240 / 50-60 Hz 230V / 50 Hz	161 kg
	79E3.47NMV.03	72E3.47NMV.03		D	700	2246	850	625 lt	60 mm	-	0.35 kW 0.28 kW	220-240 / 50-60 Hz 230V / 50 Hz	203 kg

700 SERIE

GN 1/1 SIZE COUNTER TYPE REFRIGERATOR

OUTER BODY
AISI 430
INSIDE CABINET
AISI 304

TEMPERATURE
-2 / +8 °C

OPTIONAL ACCESSORIES

- REMOTE CONDENSING UNIT
- WIFI MONITORING KIT
- BLUETOOTH MONITORING KIT
- GLASS DOOR
- GN 1/1 DRAWERS
- GRID SHELF
- H:150MM. / Ø:125MM. CASTER

06

	REFRIGERANT (R134A)	REFRIGERANT (R290)		ENERGY EFFICIENCY (R290)	L	W/P	H	CAPACITY	INSULATION	SHELF	POWER.	VOLTAGE	WEIGHT
	79E4.27NMV.00	72E4.27NMV.00		C	700	1314	850	301 lt	60 mm	2	0.21 kW 0.18 kW	220-240 / 50-60 Hz 230V / 50 Hz	95 kg
	79E4.37NMV.00	72E4.37NMV.00		C	700	1780	850	457 lt	60 mm	3	0.30 kW 0.24 kW	220-240 / 50-60 Hz 230V / 50 Hz	128 kg
	79E4.47NMV.00	72E4.47NMV.00		C	700	2246	850	625 lt	60 mm	4	0.36 kW 0.28 kW	220-240 / 50-60 Hz 230V / 50 Hz	159 kg
	79E4.27NMV.01	72E4.27NMV.01		D	700	1314	850	301 lt	60 mm	2	0.21 kW 0.18 kW	220-240 / 50-60 Hz 230V / 50 Hz	99 kg
	79E4.37NMV.01	72E4.37NMV.01		D	700	1780	850	457 lt	60 mm	3	0.30 kW 0.24 kW	220-240 / 50-60 Hz 230V / 50 Hz	134 kg
	79E4.47NMV.01	72E4.47NMV.01		D	700	2246	850	625 lt	60 mm	4	0.36 kW 0.28 kW	220-240 / 50-60 Hz 230V / 50 Hz	167 kg
	79E4.27NMV.02	72E4.27NMV.02		C	700	1314	850	301 lt	60 mm	-	0.21 kW 0.18 kW	220-240 / 50-60 Hz 230V / 50 Hz	110 kg
	79E4.37NMV.02	72E4.37NMV.02		C	700	1780	850	457 lt	60 mm	-	0.28 kW 0.22 kW	220-240 / 50-60 Hz 230V / 50 Hz	151 kg
	79E4.47NMV.02	72E4.47NMV.02		D	700	2246	850	625 lt	60 mm	-	0.35 kW 0.28 kW	220-240 / 50-60 Hz 230V / 50 Hz	189 kg
	79E4.27NMV.03	72E4.27NMV.03		C	700	1314	850	301 lt	60 mm	-	0.21 kW 0.18 kW	220-240 / 50-60 Hz 230V / 50 Hz	117 kg
	79E4.37NMV.03	72E4.37NMV.03		C	700	1780	850	457 lt	60 mm	-	0.28 kW 0.22 kW	220-240 / 50-60 Hz 230V / 50 Hz	161 kg
	79E4.47NMV.03	72E4.47NMV.03		D	700	2246	850	625 lt	60 mm	-	0.35 kW 0.28 kW	220-240 / 50-60 Hz 230V / 50 Hz	203 kg

700 SERIE
GN 1/1 SIZE
COUNTER TYPE FREEZERS

OUTER BODY
AISI 304
INSIDE CABINET
AISI 304

TEMPERATURE
-5 / -22 °C

OPTIONAL ACCESSORIES

- REMOTE CONDENSING UNIT
- WIFI MONITORING KIT
- BLUETOOTH MONITORING KIT
- GLASS DOOR
- GN 1/1 DRAWERS
- GRID SHELF
- H:150MM. / Ø:125MM. CASTER

	REFRIGERANT (R404A)	REFRIGERANT (R290)		ENERGY EFFICIENCY (R290)	L	W/P	H	CAPACITY	INSULATION	SHELF	POWER.	VOLTAGE	WEIGHT
	79E3.27LMV.00	72E3.27LMV.00		E	700	1314	850	301 lt	60 mm	2	0.50 kW 0.45 kW	220-240 / 50-60 Hz 230V / 50 Hz	97 kg
	79E3.37LMV.00	72E3.37LMV.00		E	700	1780	850	457 lt	60 mm	3	0.65 kW 0.54 kW	220-240 / 50-60 Hz 230V / 50 Hz	130 kg
	79E3.47LMV.00	72E3.47LMV.00		E	700	2246	850	625 lt	60 mm	4	0.90 kW 0.67 kW	220-240 / 50-60 Hz 230V / 50 Hz	161 kg
	79E3.27LMV.02	72E3.27LMV.02		E	700	1314	850	301 lt	60 mm	-	0.50 kW 0.45 kW	220-240 / 50-60 Hz 230V / 50 Hz	112 kg
	79E3.37LMV.02	72E3.37LMV.02		E	700	1780	850	457 lt	60 mm	-	0.75 kW 0.54 kW	220-240 / 50-60 Hz 230V / 50 Hz	153 kg
	79E3.47LMV.02	72E3.47LMV.02		E	700	2246	850	625 lt	60 mm	-	0.90 kW 0.67 kW	220-240 / 50-60 Hz 230V / 50 Hz	191 kg
	79E3.27LMV.03	72E3.27LMV.03		E	700	1314	850	301 lt	60 mm	-	0.50 kW 0.45 kW	220-240 / 50-60 Hz 230V / 50 Hz	119 kg
	79E3.37LMV.03	72E3.37LMV.03		E	700	1780	850	457 lt	60 mm	-	0.75 kW 0.54 kW	220-240 / 50-60 Hz 230V / 50 Hz	163 kg
	79E3.47LMV.03	72E3.47LMV.03		E	700	2246	850	625 lt	60 mm	-	0.90 kW 0.67 kW	220-240 / 50-60 Hz 230V / 50 Hz	205 kg

700 SERIE

GN 1/1 SIZE
COUNTER TYPE
FREEZERS

OUTER BODY
AISI 430
INSIDE CABINET
AISI 304

TEMPERATURE
-5 / -22 °C

OPTIONAL ACCESSORIES

- REMOTE CONDENSING UNIT
- WIFI MONITORING KIT
- BLUETOOTH MONITORING KIT
- GLASS DOOR
- GN 1/1 DRAWERS
- GRID SHELF
- H:150MM. / Ø:125MM. CASTER

	REFRIGERANT			ENERGY EFFICIENCY (R290)	L	W/P	H	CAPACITY	INSULATION	SHELF	POWER.	VOLTAGE	WEIGHT
	(R404A)	(R290)											
	79E4.27LMV.00	72E4.27LMV.00		E	700	1314	850	301 lt	60 mm	2	0.50 kW 0.45 kW	220-240 / 50-60 Hz 230V / 50 Hz	97 kg
	79E4.37LMV.00	72E4.37LMV.00		E	700	1780	850	457 lt	60 mm	3	0.65 kW 0.54 kW	220-240 / 50-60 Hz 230V / 50 Hz	130 kg
	79E4.47LMV.00	72E4.47LMV.00		E	700	2246	850	625 lt	60 mm	4	0.90 kW 0.67 kW	220-240 / 50-60 Hz 230V / 50 Hz	161 kg
	79E4.27LMV.02	72E4.27LMV.02		E	700	1314	850	301 lt	60 mm	-	0.50 kW 0.45 kW	220-240 / 50-60 Hz 230V / 50 Hz	112 kg
	79E4.37LMV.02	72E4.37LMV.02		E	700	1780	850	457 lt	60 mm	-	0.75 kW 0.54 kW	220-240 / 50-60 Hz 230V / 50 Hz	153 kg
	79E4.47LMV.02	72E4.47LMV.02		E	700	2246	850	625 lt	60 mm	-	0.90 kW 0.67 kW	220-240 / 50-60 Hz 230V / 50 Hz	191 kg
	79E4.27LMV.03	72E4.27LMV.03		E	700	1314	850	301 lt	60 mm	-	0.50 kW 0.45 kW	220-240 / 50-60 Hz 230V / 50 Hz	119 kg
	79E4.37LMV.03	72E4.37LMV.03		E	700	1780	850	457 lt	60 mm	-	0.75 kW 0.54 kW	220-240 / 50-60 Hz 230V / 50 Hz	163 kg
	79E4.47LMV.03	72E4.47LMV.03		E	700	2246	850	625 lt	60 mm	-	0.90 kW 0.67 kW	220-240 / 50-60 Hz 230V / 50 Hz	205 kg

600 SERIE
325x430 SIZE
COUNTER TYPE REFRIGERATOR

OUTER BODY
AISI 304
INSIDE CABINET
AISI 304

TEMPERATURE
-2 / +8 °C

OPTIONAL ACCESSORIES

- REMOTE CONDENSING UNIT
- WIFI MONITORING KIT
- BLUETOOTH MONITORING KIT
- GLASS DOOR
- GN 1/1 DRAWERS
- GRID SHELF
- H:150MM. / Ø:125MM. CASTER

	REFRIGERANT			ENERGY EFFICIENCY (R290)	L	W/P	H	CAPACITY	INSULATION	SHELF	POWER.	VOLTAGE	WEIGHT
	(R134A)	(R290)											
	79E3.26NMV.00	72E3.26NMV.00		C	600	1314	850	252 lt	60 mm	2	0.21 kW 0.18 kW	220-240 / 50-60 Hz 230V / 50 Hz	88 kg
	79E3.36NMV.00	72E3.36NMV.00		C	600	1780	850	380 lt	60 mm	3	0.28 kW 0.22 kW	220-240 / 50-60 Hz 230V / 50 Hz	126 kg
	79E3.46NMV.00	72E3.46NMV.00		C	600	2246	850	518 lt	60 mm	4	0.35 kW 0.28 kW	220-240 / 50-60 Hz 230V / 50 Hz	148 kg
	79E3.26NMV.01	72E3.26NMV.01		D	600	1314	850	252 lt	60 mm	2	0.21 kW 0.18 kW	220-240 / 50-60 Hz 230V / 50 Hz	92 kg
	79E3.36NMV.01	72E3.36NMV.01		D	600	1780	850	380 lt	60 mm	3	0.30 kW 0.24 kW	220-240 / 50-60 Hz 230V / 50 Hz	132 kg
	79E3.46NMV.01	72E3.46NMV.01		D	600	2246	850	518 lt	60 mm	4	0.36 kW 0.28 kW	220-240 / 50-60 Hz 230V / 50 Hz	156 kg
	79E3.26NMV.02	72E3.26NMV.02		C	600	1314	850	252 lt	60 mm	-	0.21 kW 0.18 kW	220-240 / 50-60 Hz 230V / 50 Hz	103 kg
	79E3.36NMV.02	72E3.36NMV.02		C	600	1780	850	380 lt	60 mm	-	0.28 kW 0.22 kW	220-240 / 50-60 Hz 230V / 50 Hz	149 kg
	79E3.46NMV.02	72E3.46NMV.02		D	600	2246	850	518 lt	60 mm	-	0.35 kW 0.28 kW	220-240 / 50-60 Hz 230V / 50 Hz	178 kg
	79E3.26NMV.03	72E3.26NMV.03		C	600	1314	850	252 lt	60 mm	-	0.21 kW 0.18 kW	220-240 / 50-60 Hz 230V / 50 Hz	110 kg
	79E3.36NMV.03	72E3.36NMV.03		C	600	1780	850	380 lt	60 mm	-	0.28 kW 0.22 kW	220-240 / 50-60 Hz 230V / 50 Hz	159 kg
	79E3.46NMV.03	72E3.46NMV.03		D	600	2246	850	518 lt	60 mm	-	0.35 kW 0.28 kW	220-240 / 50-60 Hz 230V / 50 Hz	192 kg

600 SERIE
325x430 SIZE
COUNTER TYPE
FREEZERS

OUTER BODY
AISI 304
INSIDE CABINET
AISI 304

TEMPERATURE
-5 / -22 °C

OPTIONAL ACCESSORIES

- REMOTE CONDENSING UNIT
- WIFI MONITORING KIT
- BLUETOOTH MONITORING KIT
- GLASS DOOR
- GN 1/1 DRAWERS
- GRID SHELF
- H:150MM. / Ø:125MM. CASTER

	REFRIGERANT (R404A)	REFRIGERANT (R290)		ENERGY EFFICIENCY (R290)	L	W/P	H	CAPACITY	INSULATION	SHELF	POWER.	VOLTAGE	WEIGHT
	79E3.26LMV.00	72E3.26LMV.00		E	600	1314	850	301 lt	60 mm	2	0.50 kW 0.45 kW	220-240 / 50-60 Hz 230V / 50 Hz	90 kg
	79E3.36LMV.00	72E3.36LMV.00		E	600	1780	850	457 lt	60 mm	3	0.65 kW 0.54 kW	220-240 / 50-60 Hz 230V / 50 Hz	128 kg
	79E3.46LMV.00	72E3.46LMV.00		D	600	2246	850	625 lt	60 mm	4	0.90 kW 0.67 kW	220-240 / 50-60 Hz 230V / 50 Hz	150 kg
	79E3.26LMV.02	72E3.26LMV.02		E	600	1314	850	301 lt	60 mm	-	0.50 kW 0.45 kW	220-240 / 50-60 Hz 230V / 50 Hz	105 kg
	79E3.36LMV.02	72E3.36LMV.02		E	600	1780	850	457 lt	60 mm	-	0.75 kW 0.54 kW	220-240 / 50-60 Hz 230V / 50 Hz	151 kg
	79E3.46LMV.02	72E3.46LMV.02		E	600	2246	850	625 lt	60 mm	-	0.90 kW 0.67 kW	220-240 / 50-60 Hz 230V / 50 Hz	180 kg
	79E3.26LMV.03	72E3.26LMV.03		E	600	1314	850	301 lt	60 mm	-	0.50 kW 0.45 kW	220-240 / 50-60 Hz 230V / 50 Hz	112 kg
	79E3.36LMV.03	72E3.36LMV.03		E	600	1780	850	457 lt	60 mm	-	0.75 kW 0.54 kW	220-240 / 50-60 Hz 230V / 50 Hz	161 kg
	79E3.46LMV.03	72E3.46LMV.03		E	600	2246	850	625 lt	60 mm	-	0.90 kW 0.67 kW	220-240 / 50-60 Hz 230V / 50 Hz	194 kg

700 SERIE

COUNTER TYPE REFRIGERATOR WITH BASIN

OUTER BODY AISI 304
INSIDE CABINET AISI 304

TEMPERATURE +1 / +8 °C

OPTIONAL ACCESSORIES

- REMOTE CONDENSING UNIT
- WIFI MONITORING KIT
- BLUETOOTH MONITORING KIT
- GLASS DOOR
- GN 1/1 DRAWERS
- GRID SHELF
- H:150MM. / Ø:125MM. CASTER

	CODE		ENERGY EFFICIENCY	L	W/P	H	CAPACITY	INSULATION	SHELF	POWER	VOLTAGE	WEIGHT
	7919.27NTV.24		-	700	1420	850	280 lt	60 mm	2	0.35 kW	220-240 / 50-60 Hz	105 kg
	7919.37NTV.24		-	700	1880	850	460 lt	60 mm	3	0.40 kW	220-240 / 50-60 Hz	130 kg
	7919.47NTV.24		-	700	2400	850	630 lt	60 mm	4	0.50 kW	220-240 / 50-60 Hz	155 kg

Basin work tops are only suitable for NTV models.

06

700 SERIE

COUNTER TYPE REFRIGERATOR WITHOUT BASIN

OUTER BODY AISI 304
INSIDE CABINET AISI 304

TEMPERATURE +1 / +8 °C

OPTIONAL ACCESSORIES

- REMOTE CONDENSING UNIT
- WIFI MONITORING KIT
- BLUETOOTH MONITORING KIT
- GLASS DOOR
- GN 1/1 DRAWERS
- GRID SHELF
- H:150MM. / Ø:125MM. CASTER

	CODE		ENERGY EFFICIENCY	L	W/P	H	CAPACITY	INSULATION	SHELF	POWER	VOLTAGE	WEIGHT
	7919.27NTV.T1		-	700	1420	850	-	60 mm	-	0.40 kW	220-240 / 50-60 Hz	105 kg
	7919.37NTV.T1		-	700	1880	850	-	60 mm	-	0.50 kW	220-240 / 50-60 Hz	130 kg
	7919.47NTV.T1		-	700	2400	850	-	60 mm	-	0.60 kW	220-240 / 50-60 Hz	155 kg

The cooling of the gn containers is done with the cold air coming from the refrigerator.

700 SERIE

COUNTER TYPE REFRIGERATOR PIZZA OR SALAD UNIT

OUTER BODY
AISI 304
INSIDE CABINET
AISI 304

TEMPERATURE
+2/ +5 °C

OPTIONAL ACCESSORIES

- REMOTE CONDENSING UNIT
- WIFI MONITORING KIT
- BLUETOOTH MONITORING KIT
- GLASS DOOR
- GN 1/1 DRAWERS
- GRID SHELF
- H:150MM. / Ø:125MM. CASTER

	CODE		ENERGY EFFICIENCY	L	W/P	H	CAPACITY	INSULATION	SHELF	POWER	VOLTAGE	WEIGHT
	7919.27NTV.S0		-	700	1420	850	-	60 mm	-	0.40 kW	220-240 / 50-60 Hz	133 kg
	7919.37NTV.S0		-	700	1880	850	-	60 mm	-	0.50 kW	220-240 / 50-60 Hz	170 kg
	7919.47NTV.S0		-	700	2400	850	-	60 mm	-	0.60 kW	220-240 / 50-60 Hz	230 kg

The cooling of the gn containers is done with the cold air coming from the refrigerator.

700 SERIE

COUNTER TYPE REFRIGERATOR WITH SINK UNIT

OUTER BODY
AISI 304
INSIDE CABINET
AISI 304

TEMPERATURE
+2/ +5 °C

OPTIONAL ACCESSORIES

- REMOTE CONDENSING UNIT
- WIFI MONITORING KIT
- BLUETOOTH MONITORING KIT
- GLASS DOOR
- GN 1/1 DRAWERS
- GRID SHELF
- H:150MM. / Ø:125MM. CASTER

	CODE		ENERGY EFFICIENCY	L	W/P	H	CAPACITY	INSULATION	SHELF	POWER	VOLTAGE	WEIGHT
	7919.27NTV.E0		-	700	1420	850	-	60 mm	-	0.40 kW	220-240 / 50-60 Hz	105 kg
	7919.37NTV.E0		-	700	1880	850	-	60 mm	-	0.50 kW	220-240 / 50-60 Hz	130 kg
	7919.47NTV.E0		-	700	2400	850	-	60 mm	-	0.60 kW	220-240 / 50-60 Hz	155 kg

UNDER COUNTER
GN 1/1 SIZE
REFRIGERATOR

OUTER BODY
AISI 304
INSIDE CABINET
AISI 304

TEMPERATURE
0 / +10 °C

OPTIONAL ACCESSORIES

	CODE REFRIGERANT (R134A)		ENERGY EFFICIENCY	L	W/P	H	CAPACITY	INSULATION	DRAW	POWER	VOLTAGE	WEIGHT
	7919.26NTV.C1		-	600	1420	614	136 lt	60 mm	-	0.18 kW	230V / 50 Hz	67 kg
	7919.36NTV.C1		-	600	1880	614	215 lt	60 mm	-	0.25 kW	230V / 50 Hz	108 kg
	7919.46NTV.C1		-	600	2400	614	295 lt	60 mm	-	0.27 kW	230V / 50 Hz	124 kg
	7919.27NTV.C1		-	700	1420	614	170 lt	60 mm	-	0.18 kW	230V / 50 Hz	75 kg
	7919.37NTV.C1		-	700	1880	614	265 lt	60 mm	-	0.25 kW	230V / 50 Hz	122 kg
	7919.47NTV.C1		-	700	2400	614	365 lt	60 mm	-	0.27 kW	230V / 50 Hz	148 kg
	7919.26NTV.C2		-	600	1420	614	136 lt	60 mm	4	0.18 kW	230V / 50 Hz	77 kg
	7919.36NTV.C2		-	600	1880	614	215 lt	60 mm	6	0.25 kW	230V / 50 Hz	123 kg
	7919.46NTV.C2		-	600	2400	614	295 lt	60 mm	8	0.27 kW	230V / 50 Hz	144 kg
	7919.27NTV.C2		-	700	1420	614	170 lt	60 mm	4	0.18 kW	230V / 50 Hz	85 kg
	7919.37NTV.C2		-	700	1880	614	265 lt	60 mm	6	0.25 kW	230V / 50 Hz	137 kg
	7919.47NTV.C2		-	700	2400	614	365 lt	60 mm	8	0.27 kW	230V / 50 Hz	168 kg

UNDER COUNTER
GN 1/1 SIZE
FREEZERS

OUTER BODY
AISI 304
INSIDE CABINET
AISI 304

TEMPERATURE
-5 / -18 °C

OPTIONAL ACCESSORIES

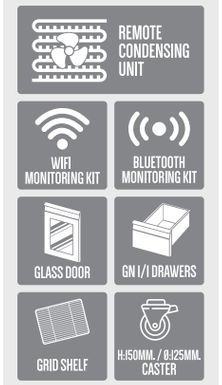

06

	CODE REFRIGERANT (R134A)		ENERGY EFFICIENCY	L	W/P	H	CAPACITY	INSULATION	DRAW	POWER	VOLTAGE	WEIGHT
	7919.26LTV.C1		-	600	1420	614	136 lt	60 mm	-	0,4 kW	230V / 50 Hz	67 kg
	7919.36LTV.C1		-	600	1880	614	215 lt	60 mm	-	0,6 kW	230V / 50 Hz	108 kg
	7919.46LTV.C1		-	600	2400	614	295 lt	60 mm	-	0,72 kW	230V / 50 Hz	124 kg
	7919.27LTV.C1		-	700	1420	614	170 lt	60 mm	-	0,4 kW	230V / 50 Hz	75 kg
	7919.37LTV.C1		-	700	1880	614	265 lt	60 mm	-	0,6 kW	230V / 50 Hz	122 kg
	7919.47LTV.C1		-	700	2400	614	365 lt	60 mm	-	0,72 kW	230V / 50 Hz	148 kg
	7919.26LTV.C2		-	600	1420	614	136 lt	60 mm	4	0,4 kW	230V / 50 Hz	77 kg
	7919.36LTV.C2		-	600	1880	614	215 lt	60 mm	6	0,6 kW	230V / 50 Hz	123 kg
	7919.46LTV.C2		-	600	2400	614	295 lt	60 mm	8	0,72 kW	230V / 50 Hz	144 kg
	7919.27LTV.C2		-	700	1420	614	170 lt	60 mm	4	0,4 kW	230V / 50 Hz	85 kg
	7919.37LTV.C2		-	700	1880	614	265 lt	60 mm	6	0,6 kW	230V / 50 Hz	137 kg
	7919.47LTV.C2		-	700	2400	614	365 lt	60 mm	8	0,72 kW	230V / 50 Hz	168 kg

Slim Type Refrigerator

CODE		POWER	L	W/P	H	CAPACITY	POWER	TEMPE.	VOLTAGE	WEIGHT
7919.10NTS.00		0.50 kW	690	600	850	150 lt	0.50 kW	-2/+8 °C	220V / 50 hz	66 kg
7919.10LTS.00		0.75 kW	690	600	850	150 lt	0.75 kW	-10/-20 °C	220V / 50 hz	66 kg
7919.15NTS.00		0.50 kW	690	710	850	190 lt	0.90 kW	-2/+8 °C	220V / 50 hz	70 kg
7919.15LTS.00		0.75 kW	690	710	850	190 lt	0.75 kW	-10/-20 °C	220V / 50 hz	70 kg

Preparation Cold Unit With Plexiglass Cover

CODE		TYPE DESIGNATION	L	W/P	H	CAPACITY/ CAPACITE	WEIGHT / POIDS NET
79E3.PZC35.L0		PZC35.L0 NTS	1320	340	300	5 x GN1/4	38 kg
79E3.PZC54.L0		PZC54.L0 NTS	1780	340	300	8 x GN1/4	50 kg
79E3.PZC72.L0		PZC72.L0 NTS	2250	340	300	11 x GN1/4	86 kg

Preparation Cold Unit With Plexiglass Cover

CODE		TYPE DESIGNATION	L	W/P	H	CAPACITY/ CAPACITE	WEIGHT / POIDS NET
79E3.PZC35.H0		PZC35.H0 NTS	1320	340	600	5 x GN1/4	42 kg
79E3.PZC54.H0		PZC54.H0 NTS	1780	340	600	8 x GN1/4	57 kg
79E3.PZC72.H0		PZC72.H0 NTS	2250	340	600	11 x GN1/4	89 kg

Refrigerated Preparation Units

CODE		TYPE DESIGNATION	L	W/P	H	CAPACITY/ CAPACITE	WEIGHT / POIDS NET
79E3.PZC35.00		PZC35.00 NTS	1320	340	440	5 x GN1/4	48 kg
79E3.PZC54.00		PZC54.00 NTS	1780	340	440	8 x GN1/4	56 kg
79E3.PZC72.00		PZC72.00 NTS	2250	340	440	11 x GN1/4	106 kg

Notes: Capacity correspond to Gross Volume /
La capacité correspond au Volume Brut

Worktop for Refrigerated Counters and Under-Counters

CODE	
MARBLE	GRANITE
7745.106A3.15	7745.106A3.11
7745.126A3.15	7745.126A3.11
7745.146A3.15	7745.146A3.11
7745.166A3.15	7745.166A3.11
7745.196A3.15	7745.196A3.11
7745.107A3.15	7745.107A3.11

Worktop for Refrigerated Counters

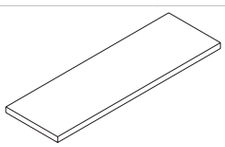

APPROVED	INOX	MARBLE	POLYETHILENE	GRANITE
TA 260	2920.13260.01	2920.13260.02	2920.13260.27	2920.13260.37
TA 360	2920.17860.01	2920.17860.02	2920.17860.27	2920.17860.37
TA 460	2920.22560.01	2920.22560.02	2920.22560.27	2920.22560.37
TAG 270	2920.13270.01	2920.13270.02	2920.13270.27	2920.13270.37
TAG 370	2920.17870.01	2920.17870.02	2920.17870.27	2920.17870.37
TAG 470	2920.22570.01	2920.22570.02	2920.22570.27	2920.22570.37

Worktop for Refrigerated Under-Counters

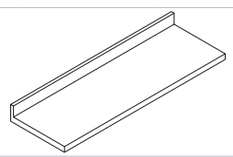

APPROVED	INOX	MARBLE	POLYETHILENE	GRANITE
TA 260	2920.13260.03	2920.13260.04	2920.13260.28	2920.13260.38
TA 360	2920.17860.03	2920.17860.04	2920.17860.28	2920.17860.38
TA 460	2920.22560.03	2920.22560.04	2920.22560.28	2920.22560.38
TAG 270	2920.13270.03	2920.13270.04	2920.13270.28	2920.13270.38
TAG 370	2920.17870.03	2920.17870.04	2920.17870.28	2920.17870.38
TAG 470	2920.22570.03	2920.22570.04	2920.22570.28	2920.22570.38

CODE	ADDITIONAL OPTIONS
2919.RMTCU.N1	Up to 400 W Remote condensing unit with R134a including installation equipments for 15m max. REMOTE UNIT "A"
2919.RMTCU.N3	Up to 700 W Remote condensing unit with R134a including installation equipments for 15m max. REMOTE UNIT "B"
2919.RMTCU.L1	Up to 500 W Remote condensing unit with R404a including installation equipments for 15m max. REMOTE UNIT "C"
2919.RMTVU.L3	Up to 800 W Remote condensing unit with R404a including installation equipments for 15m max. REMOTE UNIT "D"

CODE	ADDITIONAL OPTIONS
6268.00019.08	GN 1/1 Plastic coated grid shelf GN 1/1 SHELF PVC
6268.00019.09	SN 325x430 Plastic coated grid shelf SN 325x430 PLASTIC SHELF PVC
6268.00019.32	SN 325x430 Stainless steel grid shelf SN 325x430 SHELF SS
6268.00019.34	GN 1/1 Stainless steel grid shelf. GN 1/1 SHELF SS

CODE	ADDITIONAL OPTIONS
2919.DRAWR.0A	Optional GN 1/1 Drawers (2/3+1/3). Available only for Counter fridges "A" TYPE DRAWERS
2919.DRAWR.0B	Optional GN 1/1 Drawers (2 x 1/2). Available only for Counter fridges "B" TYPE DRAWERS
2919.DRAWR.0C	Optional GN 1/1 Drawers (3 x 1/3). Available only for Counter fridges "C" TYPE DRAWERS
2919.DRAWR.0D	Optional GN 1/1 Drawers (2 x 1/3). Available only for Under-Counter fridges "D" TYPE DRAWERS
2919.DRAWR.0E	Optional GN 1/1 Drawers (1 x 2/3). Available only for Und er-Counter fridges "E" TYPE DRAWERS

CODE	ADDITIONAL OPTIONS
2919.CDOOR.0G	Optional counter type glass door "G" TYPE DOOR

CODE	ADDITIONAL OPTIONS
2919.EPOCA.00	Wifi Monitoring Kit with EV3294 Controller
2919.EPOCA.0J	Wifi Monitoring Kit with Jumbo Controller

CODE	ADDITIONAL OPTIONS
2919.BLUET.00	Bluetooth Monitoring Kit with EV3294 Controller

CODE	ADDITIONAL OPTIONS
6234.00009.42	RS485/RS232 adapter for BMS Systems RS485 / RS232 ADAPTER

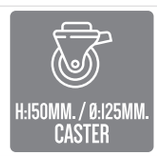

CODE	ADDITIONAL OPTIONS
2920.93570.25	4 Pieces Casters Set (2A+2B) h=150mm Ø=125mm. A: With Brakes / B: Without Brakes

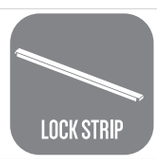

CODE	ADDITIONAL OPTIONS
2919.GCITA.00	Optional for Key Locks for each door/drawer LOCK

Split Type Refrigeration Unit

Standard panel-type and special designed cooler and freezer rooms are available. Cold rooms are being manufactured between 1kW-10kW of cooling capacities with hermetic compressors and air-cooled condensers as standard. All equipment and components are world brands having CE and ISO certificates. Customized solutions are provided on request, container type cold rooms, walk-in rooms with higher dimensions, rooms with stainless properties, rooms with special doors, water cooled and central unit systems, semi-hermetic units, gas defrosting etc.

SPLIT COLD SERIES (Evap. Temparature -8°C, Cond. Temperature +45°C) HERMETIC R404A							
TYPE	Q (Watt)	P(Hp)	TP (kW)	C.O.P	COMP TYPE	WEIGHT	POWER SUPLY
CR060 - STA	975	1/2	0,70	1,4	CAE 9460 Z	56	220V / 50 Hz
CR075 - STA	1600	3/4	1,00	1,6	CAJ 9480 Z	57	220V / 50 Hz
CR100 - STA	1708	1/1	1,20	1,4	CAJ 9510 Z	57	220V / 50 Hz
CR110 - STA	2056	1/1+	1,40	1,5	CAJ 9513 Z	60	220V / 50 Hz
CR130 - STA	2436	1,3	1,60	1,5	CAJ 4517 Z	74	220V / 50 Hz
CR150 - STA	3218	1,5	2,20	1,5	CAJ 4519 Z	75	220V / 50 Hz
CR200 - STA	3373	2,0	2,40	1,4	TFH 4524 Z	76	380V / 50 Hz
CR250 - STA	4363	2,5	2,90	1,5	TFH 4531 Z	93	380V / 50 Hz
CR300 - STA	5661	3,0	3,80	1,5	CAE 4540 Z	94	380V / 50 Hz
CR400 - STA	6092	4,0	4,00	1,5	CAJ 4546 Z	96	380V / 50 Hz
CR450 - STA	6924	4,5	4,50	1,5	CAJ 4553 Z	100	380V / 50 Hz
CR500 - STA	7863	5,0	5,00	1,6	CAJ 4561 Z	139	380V / 50 Hz
CR600 - STA	9331	6,0	6,00	1,6	CAJ 4568 Z	142	380V / 50 Hz
CR700 - STA	10056	7,0	5,50	1,5	CAJ 4573 Z	146	380V / 50 Hz
SPLIT COLD SERIES (Evap. Temparature -25°C, Cond. Temperature +45°C) HERMETIC R404A							
DF100 - STA	1005	1/1	1,2	0,8	CAJ 2446 Z	60	380V / 50 Hz
DF150 - STA	1285	1,5	1,5	0,9	CAJ 2464 Z	60	380V / 50 Hz
DF200 - STA	1865	2,0	2,0	0,9	TFH 2480 Z	76	380V / 50 Hz
DF300 - STA	2518	3,0	2,5	1,0	TFH 2518 Z	96	380V / 50 Hz
DF500 - STA	3687	5,0	3,5	1,1	TAG 2516 Z	96	380V / 50 Hz
DF700 - STA	4702	7,0	4,5	1,0	TAG 2522 Z	96	380V / 50 Hz

Q: Refrigeration Capacity — C.O.P.: Coefficient of performance

P: Nominal Compressor Horse Power — TP: Nominal Compressor Input Powe

Ozticold condensing units are used in industrial and commercial cooling applications such as cold rooms, central system fridges and icecream machines. Ozticold cooling units are designed and manufactured to operate at lower sound levels. In order to minimize the sound level, compressors are mounted in a seperate compartment and 900 rpm fans are optionally used. Average sound level is measured at 10m distance (ISO3744) and 43db(A) at max. fan cycle. We consider all reliable and ergonomic products for our clients and for the environment. Knowing that the future will be based on energy savings, we use our energy most efficiently.

Units are being manufactured from the first quality components according to the latest regulations. In the units Tecumseh, Copeland, Frascold, Bitzer, Dorin, Bock brand name compressors are used.As a standard option condensers are designed for +38/43 °C with R404a gas but depending on the needs special designs for +50/55 °C with R134a gas are also available. All condensers are manufactured with copper tubing and aluminum fins. Coils have ergonomic design and are electrostatically powder painted. Fans are EBM or Ziehl-ABEGG brands and fan speed control can be utilised for energy saving purposes. Also energy savings between 33% - 50% can be realised by using inverters at semi-hermetic and scroll units.

Cold room doors can be 80/100/120/150/200 mm in thickness as required with 40/42 kg/m³ of poliurethane density. Door resistances are used at negative temperature room applications. In case the doors are being locked from outside they still can be opened from inside. There are nitrile rubber gaskets in the doors. Sliding, hinged and monorailed doors with any dimensions are available. Stainles Steel and PVC coated doors with peek window can be manufactured on request.

Panels are manufactured in 80/100/120/150 mm thicknesses as required with 40/42 kg/m3 of poliurethane density. 0.5 mm thick wall and ceiling panel sheets are painted with 25µ thick RAL9002 colour anti-bacterial polyester paint. Surface materials can be stainless steel sheet or PVC coated as required. Floor panels can be PLYWOOD on the poliurethane (Beech tree being durable to 1200 kg/m of loads) or non-slippery stainless steel surfaces on plywoods. Thermal conductivity factor of the panels is 0.022 W/mK and is classified as B2 (normal flamable) according to the TS EN14509 (DIN4102) norms. Depending on the needs B1 type (low-flamable) panels can be manufactured. There is a protecting film layer on the panels.

Cold Rooms

CODE	L	W/P	H
7919.CR1515.00	1500	1500	2400
7919.CR1517.00	1500	1750	2400
7919.CR2015.00	2000	1500	2400
7919.CR2020.00	2000	2000	2400
7919.CR2022.00	2000	2250	2400
7919.CR2515.00	2500	1500	2400
7919.CR2517.00	2500	1750	2400
7919.CR2520.00	2500	2000	2400
7919.CR2525.00	2500	2500	2400
7919.CR3015.00	3000	1500	2400
7919.CR3020.00	3000	2000	2400
7919.CR3025.00	3000	2500	2400
7919.CR3030.00	3000	3000	2400
7919.CR3515.00	3500	1500	2400
7919.CR3017.00	3000	1750	2400
7919.CR3520.00	3500	2000	2400
7919.CR3525.00	3500	2500	2400
7919.CR3530.00	3500	3000	2400
7919.CR3535.00	3500	3500	2400
7919.CR4015.00	4000	1500	2400
7919.CR4020.00	4000	2000	2400
7919.CR4025.00	4000	2500	2400

CODE	L	W/P	H
7919.CR4030.00	4000	3000	2400
7919.CR4035.00	4000	3500	2400
7919.CR4040.00	4000	4000	2400
7919.CR4515.00	4500	1500	2400
7919.CR4520.00	4500	2000	2400
7919.CR4525.00	4500	2500	2400
7919.CR4530.00	4500	3000	2400
7919.CR4535.00	4500	3500	2400
7919.CR4540.00	4500	4000	2400
7919.CR4545.00	4500	4500	2400
7919.CR5025.00	5000	2500	2400
7919.CR5030.00	5000	3000	2400
7919.CR5035.00	5000	3500	2400
7919.CR5040.00	5000	4000	2400
7919.CR5045.00	5000	4500	2400
7919.CR5050.00	5000	5000	2400
7919.CR6030.00	6000	3000	2400
7919.CR6040.00	6000	4000	2400
7919.CR6045.00	6000	4500	2400
7919.CR6050.00	6000	5000	2400
7919.CR6055.00	6000	5500	2400
7919.CR6060.00	6000	6000	2400

Deep Freezer Rooms

CODE	L	W/P	H
7919.DF1515.00	1500	1500	2400
7919.DF1517.00	1500	1750	2400
7919.DF2015.00	2000	1500	2400
7919.DF2022.00	2000	2000	2400
7919.DF2020.00	2000	2250	2400
7919.DF2015.00	2500	1500	2400
7919.DF2517.00	2500	1750	2400
7919.DF2520.00	2500	2000	2400
7919.DF2525.00	2500	2500	2400
7919.DF3015.00	3000	1500	2400
7919.DF3020.00	3000	2000	2400
7919.DF3025.00	3000	2500	2400
7919.DF3030.00	3000	3000	2400
7919.DF3515.00	3500	1500	2400
7919.DF3017.00	3000	1750	2400
7919.DF3520.00	3500	2000	2400
7919.DF3525.00	3500	2500	2400
7919.DF3530.00	3500	3000	2400
7919.DF3535.00	3500	3500	2400
7919.DF4015.00	4000	1500	2400
7919.DF4020.00	4000	2000	2400
7919.DF4025.00	4000	2500	2400

CODE	L	W/P	H
7919.DF4030.00	4000	3000	2400
7919.DF4035.00	4000	3500	2400
7919.DF4040.00	4000	4000	2400
7919.DF4515.00	4500	1500	2400
7919.DF4520.00	4500	2000	2400
7919.DF4525.00	4500	2500	2400
7919.DF4530.00	4500	3000	2400
7919.DF4535.00	4500	3500	2400
7919.DF4540.00	4500	4000	2400
7919.DF4545.00	4500	4500	2400
7919.DF5025.00	5000	2500	2400
7919.DF5030.00	5000	3000	2400
7919.DF5035.00	5000	3500	2400
7919.DF5040.00	5000	4000	2400
7919.DF5045.00	5000	4500	2400
7919.DF5050.00	5000	5000	2400
7919.DF6030.00	6000	3000	2400
7919.DF6040.00	6000	4000	2400
7919.DF6045.00	6000	4500	2400
7919.DF6050.00	6000	5000	2400
7919.DF6055.00	6000	5500	2400
7919.DF6060.00	6000	6000	2400

ozti

BANQUET TROLLEYS

110 Hot Banquet Trolleys

112 Cold Banquet Trolleys

113 Cold & Hot Banquet Trolley
Nautral Banquet Trolley

Hot Banquet Trolley

Shelves are sold separately in the banquet trolleys

7919.70182.00 | **7919.14018.00**

- The convection-heated banquet trolleys can be used with dry or moist air, depending on what is best for your food.
- Large storage area suitable to contain 2/1 GN containers or shelves on anti-tilt pressed runners.
- Optimized bottom to up forced air flow provides even temperature distribution and fast heating in any conditions.
- Cabinet fitted with up to 70 mm thickness of eco friendly polyurethane insulation for best insulating performance.
- Removable triple-chamber balloon magnetic gasket to improve insulation and to reduce energy consumption.
- The gap on the sides-end ensures the circulation of the convection air to achieve even temperature inside the banquet trolley.
- The slide-in heating module can be removed easily.
- The water tank for the moist-air heating can also be removed conveniently.
- Complete stainless steel inner and outer body.
- Digital thermometer thermostat can be operated between 50-80°C.
- Environment friendly insulation polyurethan injection at the density of 40 kg./m3.
- Manual water refilling.

MODEL	CODE	TYPE	L	W	H	POWER	TEMP	VOLUME	WEIGHT	VOLTAGE
	7919.70182.00	11 GN 2/1-100	910	827	1816	2 kW	50-80 °C	1.51 m^3	117 kg	230V / 50-60 Hz
	7943.70182.00	11 GN 2/1-100 430 AISI	910	827	1816	2 kW	50-80 °C	1.51 m^3	117 kg	230V / 50-60 Hz
	7919.70182.01	11 GN 2/1-100	910	827	1816	2 kW	50-80 °C	1.51 m^3	121 kg	230V / 50-60 Hz
	7919.14018.00	11+11 GN 2/1-100	910	1517	1816	2 kW	50-80 °C	2.75 m^3	189 kg	230V / 50-60 Hz
	7919.14018.01	11+11 GN 2/1-100	910	1517	1816	2 kW	50-80 °C	2.75 m^3	191 kg	230V / 50-60 Hz
	7919.70130.00	5 GN 2/1-100	910	827	1160	2 kW	50-80 °C	0.99 m^3	84 kg	230V / 50-60 Hz
	7919.70130.01	5 GN 2/1-100	910	827	1160	2 kW	50-80 °C	0.99 m^3	87 kg	230V / 50-60 Hz

Hot Banquet Trolley - With Steam

- 2.5 lt. Capacity water tank.
- 5-stage steam system.
- Interior base with corners, pressed from a single sheet.
- High quality thermal insulation of the cabinet for energy saving.
- Silicone gasket prevents heat escape.
- The convection heated banquet trolleys can be used dry or with moist air, depending on what is best for your food.
- Up to 85 °C heat setting option in the cab.
- Doors are self closing and can be fully opened up to 270 degree.
- Protective rubber wedges against impacts around the device.
- Ergonomic locking system.
- Easy transport.

7868.52180.11

CODE	TYPE	L	W	H	POWER	TEMP	TRAY	VOLTAGE
7868.52108.11	GN 1/1	570	879	1114	1.5 kW	30-85˚C	10	230 V / NPE 50-60 Hz
7868.52144.11	GN 1/1	570	879	1469	1.5 kW	30-85˚C	15	230 V / NPE 50-60 Hz
7868.52180.11	GN 1/1	570	879	1824	1.5 kW	30-85˚C	20	230 V / NPE 50-60 Hz
7868.77108.12	GN 2/1	775	999	1114	1.5 kW	30-85˚C	10	230 V / NPE 50-60 Hz
7868.77144.12	GN 2/1	775	999	1469	1.5 kW	30-85˚C	15	230 V / NPE 50-60 Hz
7868.77180.12	GN 2/1	775	999	1824	3 kW	30-85˚C	20	230 V / NPE 50-60 Hz

Hot Banquet Trolley - Without Steam

- Interior base with corners, pressed from a single sheet.
- High quality thermal insulation of the cabinet for energy saving.
- Silicone gasket prevents heat escape.
- The convection heated banquet trolleys can be used dry or with moist air, depending on what is best for your food.
- Up to 85 °C heat setting option in the cab.
- Doors are self closing and can be fully opened up to 270 degree.
- Protective rubber wedges against impacts around the device.
- Ergonomic locking system
- Easy transport.

7868.52180.10

CODE	TYPE	L	W	H	POWER
7868.52108.10	GN 1/1	570	879	1114	1.5 kW
7868.52144.10	GN 1/1	570	879	1469	1.5 kW
7868.52180.10	GN 1/1	570	879	1824	1.5 kW
7868.77108.10	GN 2/1	999	775	1114	1.5 kW
7868.77144.10	GN 2/1	999	775	1469	1.5 kW
7868.77180.10	GN 2/1	999	775	1824	3 kW

Cold Banquet Trolley

Environment friendly insulation polyurethane injection at the density of 40-42 kg /m3.

Complete stainless steel inner and outer body.

GN 2/1 tray can be fitted. The refrigeration is ventileted, plastic coated adjustable wire shelves. HACCP Digital thermometer and wheels.

7919.GNB05.00

MODEL	CODE	TYPE	L	W	H	POWER	CAPACITY	TEMP	VOLUME	WEIGHT	VOLTAGE
	7919.GNB05.00	3 GN 2/1	910	850	1816	0.31 kW	500 lt	-2 / +8 °C	1.55 m³	127 kg	230 V / NPE 50 Hz

Cold Banquet Trolley

Digital control with cabinet temperature display and setting and manual activation of defrost cycle.

Automatic defrost.

Performance guaranteed at ambient temperatures of +43°C.

High quality thermal insulation of the cabinet for energy saving.

Cleaning-free condenser: the structure of the wire frame condenser prevents dust and grease accumulation avoiding periodical cleaning operations and reducing energy consumption.

Automatic evaporation of the defrosting water by hot gas on the top for energy saving.

Hidden evaporator thus guaranteeing higher storage capacity and less corrosion problems.

7819.15G11.01

CODE	L	W	H	POWER	TEMP	VOLTAGE
7819.15G11.01	570	880	1750	0.23 kW	0-10 °C	230 V / NPE 50 - 60Hz
7819.15G21.01	775	1000	1755	0.25 kW	0-10 °C	230 V / NPE 50 - 60Hz

Cold & Hot Banquet Trolley

- Digital control with cabinet temperature display and setting and manual activation of defrost cycle.
- Automatic defrost.
- Performance guaranteed at ambient temperatures of +43°C.
- High quality thermal isolation.
- Cleaning-free condenser: the structure of the wire frame condenser prevents dust and grease accumulation avoiding periodical cleaning operations and reducing energy consumption.
- Automatic evaporation of the defrosting water by hot gas on the top for energy saving.
- Hidden evaporator thus guaranteeing higher storage capacity and less corrosion problems.
- Up to 85°C heat setting option in the cabinet.
- 5-stage steam system.
- Optimized bottom to up forced air flow provide even temperature distribution and fast heating in any conditions.
- Protective rubber wedges aganist impact around the device.
- Silicone gasket prevents heat escape.

7919.15G11.11

CODE	TYPE	L	W	H	POWER	TEMP	VOLTAGE
7819.15G11.11	GN1/1	570	893	1749	1.85 kW	0-85 °C	230 V / NPE 50 - 60Hz

Neutral Banquet Trolley

7919.70182.03

7919.14018.03

Complete stainless steel inner and outer body. Environment friendly insulation polyurethane injection at the density of 40-42 kg /m3

MODEL	CODE	TYPE	L	W	H	VOLUME	WEIGHT
	7919.14018.03	GN 2/1	910	1517	1816	2.75 m^3	185 kg
	7919.70182.03	GN 2/1	910	827	1816	1.51 m^3	113 kg
	7919.70130.03	GN 2/1	910	827	1160	0.99 m^3	80 kg

DISHWASHER

116
35x35 - 40x40
Glasswasher

120
50x50 Dishwasher

127
Hood Type Dıshwasher

132
Conveyor Type
Dishwasher

134
Flight Type
Dishwasher

136
Pot & Utensil Washer

137
Vegetable Washing Machine
Salad and Vegetable Dryer

35x35-40x40 Mechanical Panel Glasswashers

- Stainless steel pressed body and inclined washing tank.
- Drawn tank base housing filter (Hygienic).
- 2.5 l water consumption per cycle.
- Automatic, user friendly electromechanical control panel.
- Saves energy, detergent and water.
- Washing arms in reinforced polypropylene.
- Adjustable feet for height optimization.
- Easy start up: one button to fill in and heat water in the boiler tank.
- Electrical components and cabling according to international standarts and security regulations.
- Completely sealed body to guarantee IPX5 water protection.
- Thermostat-controlled rinse and washing temparature for efficient washing.
- Non-return - Check valve system.
- Washing temperature at 55-60°C (water supply at a minimum of 2 bar and 50°C).
- Rinsing temperature at 80-85 °C (water supply at a minimum of 2 bar and 50°C).

	35 x 35 GLASHWASHER CODE					40 x 40 GLASHWASHER CODE				
	OBY 35M	OBY 35M P	OBY 35M PT	OBY 35M PD	OBY 35M PDT	OBY 40M	OBY 40M P	OBY 40M PT	OBY 40M PD	OBY 40M PDT
	073M.00000.AD	073M.10000.AD	073M.10010.AD	073M.11000.AD	073M.11010.AD	074M.00000.AD	074M.10000.AD	074M.10010.AD	074M.11000.AD	074M.11010.AD
Rinse Aid Dispenser	-	√	√	√	√	-	√	√	√	√
Detergent Dispenser	-	-	-	√	√	-	-	-	√	√
Rinsing Pump	-	-	-	-	-	-	-	-	-	-
Drain Pump	-	-	√	-	√	-	-	√	-	√
1 Glass Rack Promotional with cutlery and cup holders.	√	√	√	√	√	-	-	-	-	-
2 basket promotional (plate/ glass) with cutlery holders	-	-	-	-	-	√	√	√	√	√

08

TECHNICAL FEATURES					
	35 x 35 GLASSWASHER	40 x 40 GLASSWASHER		35 x 35 GLASSWASHER	40 x 40 GLASSWASHER
Electric connection	230V~NPE / 50 Hz	230V~NPE / 50 Hz	Water inlet pressure / Temp.	2-4 Bar / 50 °C	2-4 Bar / 50 °C
Total rating	3.3 kW	3.3 kW	Heat power (Washing/Rinsing)	2 / 3 kW	2 / 3 kW
Washing capacity (glass/hr)	500 glass (Max.)	500 glass (Max.)	Dirty water discharge connection	3/4 " (Ø 28 mm)	3/4 " (Ø 28 mm)
Washing capacity (basket/hr)	30	30	Maximum noise	61 dBA	70 dBA
Washing / Boiler tank capacity	9,2 / 2,8 l	18,4 / 2,8 l	Gross weight	35 (±5) kg	40 (±5) kg
Washing program number	1	1	Dimensions (WxDxH)	425x465x630 mm	475x540x765 mm
Program times (seconds)	120	120	Protection class	IPX5	IPX5
Washing water temp.	55-60°C	55-60°C	Rack dimension	35 x 35 cm	40 x 40 cm
Rinsing water temp.	80-85 °C (max.)	80-85 °C (max.)	Useful loading height	225 mm	330 mm
Water inlet connection	3/4 "	3/4 "	Inclination	6°	6°
Washing pump power	0.075 kW	0.25 kW			

35x35-40x40 Touch Panel Glasswashers

- Stainless steel pressed body and inclined washing tank.
- Drawn tank base housing filter (Hygienic).
- 2.5 l water consumption per cycle, 3 Selectable Washing Programmes.
- Automatic, user friendly control panel. It also includes temperature indicator on the front panel.
- Adjustable detergent / rinse aid time from touch panel.
- Digital pressure switch for washing tank.
- Easy to follow washing steps with dynamic and coloured touch screen.
- Saves energy, detergent and water.
- Washing arms in reinforced polypropylene.
- Adjustable feet for height optimization.
- Easy start up: one button to fill in and heat water in the boiler tank.
- Electrical components and cabling according to international standarts and security regulations.
- Completely sealed body to guarantee IPX5 water protection.
- Digital controlled rinse and washing temparature for efficient washing .
- Non-return - Check valve system.
- The soft start option enables ultra-sensitive and quiet starting of the program.
- Washing temperature at 55-60°C (water supply at a minimum of 2 bar and 50°C).
- Rinsing temperature at 80-85 °C (water supply at a minimum of 2 bar and 50°C).

	35 x 35 GLASHWASHER CODE					40 x 40 GLASHWASHER CODE				
	OBY 35T	OBY 35T P	OBY 35T PT	OBY 35T PD	OBY 35T PDT	OBY 40T	OBY 40T P	OBY 40T PT	OBY 40T PD	OBY 40T PDT
	073T.00000.AD	073T.10000.AD	073T.10010.AD	073T.11000.AD	073T.11010.AD	074T.00000.AD	074T.10000.AD	074T.10010.AD	074T.11000.AD	074T.11010.AD
Rinse Aid Dispenser	-	√	√	√	√	-	√	√	√	√
Detergent Dispenser	-	-	-	√	√	-	-	-	√	√
Rinsing Pump	-	-	-	-	-	-	-	-	-	-
Drain Pump	-	-	√	-	√	-	-	√	-	√
1 Glass Rack Promotional with cutlery and cup holders.	√	√	√	√	√	-	-	-	-	-
2 basket promotional (plate/ glass) with cutlery holders	-	-	-	-	-	√	√	√	√	√
Soft Start	OPT	OPT	OPT	OPT	OPT	OPT	OPT	OPT	OPT	OPT

08

TECHNICAL FEATURES					
	35 x 35 GLASSWASHER	40 x 40 GLASSWASHER		35 x 35 GLASSWASHER	40 x 40 GLASSWASHER
Electric connection	230V~NPE / 50 Hz	230V~NPE / 50 Hz	Water inlet pressure / Temp.	2-4 Bar / 50 °C	2-4 Bar / 50 °C
Total rating	3.3 kW	3.3 kW	Heat power (Washing/Rinsing)	2 / 3 kW	2 / 3 kW
Washing capacity (glass/hr)	500 glass (Max.)	500 glass (Max.)	Dirty water discharge connection	3/4 " (Ø 28 mm)	3/4 " (Ø 28 mm)
Washing capacity (basket/hr)	31/26/20	34/26/18	Maximum noise	61 dBA	70 dBA
Washing / Boiler tank capacity	9,2 / 2,8 l	18,4 / 2,8 l	Gross weight	35 (±5) kg	40 (±5) kg
Washing program number	3	3	Dimensions (WxDxH)	425x465x630 mm	475x540x765 mm
Program times (seconds)	115/135/175	105/135/195	Protection class	IPX5	IPX5
Washing water temp.	55-60°C	55-60°C	Rack dimension	35 x 35 cm	40 x 40 cm
Rinsing water temp.	80-85 °C (max.)	80-85 °C (max.)	Useful loading height	225 mm	330 mm
Water inlet connection	3/4 "	3/4 "	Inclination	6°	6°
Washing pump power	0.075 kW	0.25 kW			

35x35-40x40 King Touch Panel Glasswashers

- Stainless steel pressed body and inclined washing tank.
- Drawn tank base housing filter (Hygienic).
- 2.5 l water consumption per cycle.
- Automatic, user friendly control panel. It also includes temperature indicator on the front panel
- Adjustable detergent / rinse aid time from touch panel.
- Digital pressure switch for washing tank.
- Easy to follow washing steps with dynamic and coloured touch screen .
- Saves energy, detergent and water.
- Washing arms in reinforced polypropylene.
- Adjustable feet for height optimization.
- Easy start up: one button to fill in and heat water in the boiler tank.
- Electrical components and cabling according to international standarts and security regulations.
- Completely sealed body to guarantee IPX5 water protection.
- Digital controlled rinse and washing temparature for efficient washing.
- Non-return - Check valve system.
- The soft start option enables ultra-sensitive and quiet starting of the program.
- Washing temperature at 55-60°C (water supply at a minimum of 2 bar and 50°C).
- Rinsing temperature at 80-85 °C (water supply at a minimum of 2 bar and 50°C).
- High efficiency air gap (class AB) in water inlet circuit to avoid water being siphoned back into the network as a result of a sudden drop in main pressures.
- Smart rinse option, atmospheric boiler combine with rinse booster pump offer a perfect rinsing performance in term of constant pressure and high temperature of the water always at same temparature.

	35 x 35 GLASHWASHER CODE					40 x 40 GLASHWASHER CODE				
	OBY 35T R R4	OBY 35T PR R4	OBY 35T PRT R4	OBY 35T PDR R4	OBY 35T PDRT R4	OBY 40T R R4	OBY 40T PR R4	OBY 40T PRT R4	OBY 40T PDR R4	OBY 40T PDRT R4
	073T.0010B.AK	073T.1010B.AK	073T.1011B.AK	073T.1110B.AK	073T.1111B.AK	074T.0010B.AK	074T.1010B.AK	074T.1011B.AK	074T.1110B.AK	074T.1111B.AK
Rinse Aid Dispenser	-	√	√	√	√	-	√	√	√	√
Detergent Dispenser	-	-	-	√	√	-	-	-	√	√
Rinsing Pump	√	√	√	√	√	√	√	√	√	√
Drain Pump	-	-	√	-	√	-	-	√	-	√
1 Glass Rack Promotional with cutlery and cup holders.	√	√	√	√	√	-	-	-	-	-
2 basket promotional (plate/ glass) with cutlery holders	-	-	-	-	-	√	√	√	√	√
Soft Start	OPT	OPT	OPT	OPT	OPT	OPT	OPT	OPT	OPT	OPT

08

TECHNICAL FEATURES					
	35 x 35 GLASSWASHER	40 x 40 GLASSWASHER		35 x 35 GLASSWASHER	40 x 40 GLASSWASHER
Electric connection	230V~NPE / 50 Hz	230V~NPE / 50 Hz	Water inlet pressure / Temp.	2-4 Bar / 50 °C	2-4 Bar / 50 °C
Total rating	3.3 kW	3.3 kW	Rinsing pump power	0.18 kW	0.18 kW
Washing capacity (glass/hr)	500 glass (Max.)	500 glass (Max.)	Heat power (Washing/Rinsing)	2 / 3 kW	2 / 3 kW
Washing capacity (basket/hr)	32/27/21	36/27/18	Dirty water discharge connection	3/4 " (Ø 28 mm)	3/4 " (Ø 28 mm)
Washing / Boiler tank capacity	9,2 / 3 l	18,4 / 3 l	Maximum noise	61 dBA	70 dBA
Washing program number	3	3	Gross weight	35 (±5) kg	40 (±5) kg
Program times (seconds)	108/128/168	100/130/190	Dimensions (WxDxH)	425x465x630 mm	475x540x765 mm
Washing water temp.	55-60°C	55-60°C	Protection class	IPX5	IPX5
Rinsing water temp.	80-85 °C (max.)	80-85 °C (max.)	Rack dimension	35 x 35 cm	40 x 40 cm
Water inlet connection	3/4 "	3/4 "	Useful loading height	225 mm	330 mm
Washing pump power	0.19 kW	0.25 kW	Inclination	6°	6°

35x35-40x40 Eco Touch Type Glasswashers

- Stainless steel pressed body and inclined washing tank.
- Drawn tank base housing filter (Hygienic).
- 2.5 l water consumption per cycle.
- Automatic, user friendly control panel. It also includes temperature indicator on the front panel.
- Adjustable detergent / rinse aid time from touch panel.
- Digital pressure switch for washing tank.
- Easy to follow washing steps with dynamic and coloured touch screen.
- Saves energy, detergent and water.
- Washing arms in reinforced polypropylene.
- Adjustable feet for height optimization.
- Easy start up: one button to fill in and heat water in the boiler tank.
- Electrical components and cabling according to international standarts and security regulations.
- Completely sealed body to guarantee IPX5 water protection.
- Digital controlled rinse and washing temparature for efficient washing.
- Non-return - Check valve system.
- Washing temperature at 55-60°C (water supply at a minimum of 2 bar and 50°C).
- Rinsing temperature at 80-85 °C (water supply at a minimum of 2 bar and 50°C).

	35 x 35 GLASHWASHER CODE					40 x 40 GLASHWASHER CODE				
	OBY 35S	OBY 35S P	OBY 35S PT	OBY 35S PD	OBY 35S PDT	OBY 40S	OBY 40S P	OBY 40S PT	OBY 40S PD	OBY 40S PDT
	073S.00000.AD	073S.10000.AD	073S.10010.AD	073S.11000.AD	073S.11010.AD	074S.00000.AD	074S.10000.AD	074S.10010.AD	074S.11000.AD	074S.11010.AD
Rinse Aid Dispenser	-	√	√	√	√	-	√	√	√	√
Detergent Dispenser	-	-	-	√	√	-	-	-	√	√
Rinsing Pump	-	-	-	-	-	-	-	-	-	-
Drain Pump	-	-	√	-	√	-	-	√	-	√
1 Glass Rack Promotional with cutlery and cup holders.	√	√	√	√	√	-	-	-	-	-
2 basket promotional (plate/ glass) with cutlery holders	-	-	-	-	-	√	√	√	√	√

TECHNICAL FEATURES					
	35 x 35 GLASSWASHER	40 x 40 GLASSWASHER		35 x 35 GLASSWASHER	40 x 40 GLASSWASHER
Electric connection	230V~NPE / 50 Hz	230V~NPE / 50 Hz	Water inlet pressure / Temp.	2-4 Bar / 50 °C	2-4 Bar / 50 °C
Total rating	3.3 kW	3.3 kW	Heat power (Washing/Rinsing)	2 / 3 kW	2 / 3 kW
Washing capacity (glass/hr)	432 glass (Max.)	432 glass (Max.)	Dirty water discharge connection	3/4 " (Ø 28 mm)	3/4 " (Ø 28 mm)
Washing capacity (basket/hr)	27/18/14	27/18/14	Maximum noise	61 dBA	70 dBA
Washing / Boiler tank capacity	9,2 / 2,8 l	18,4 / 2,8 l	Gross weight	35 (±5) kg	40 (±5) kg
Washing program number	3	3	Dimensions (WxDxH)	425x465x630 mm	475x540x765 mm
Program times (seconds)	132/192/252	132/192/252	Protection class	IPX5	IPX5
Washing water temp.	55-60°C	55-60°C	Rack dimension	35 x 35 cm	40 x 40 cm
Rinsing water temp.	80-85 °C (max.)	80-85 °C (max.)	Useful loading height	225 mm	330 mm
Water inlet connection	3/4 "	3/4 "	Inclination	6°	6°
Washing pump power	0.075 kW	0.25 kW			

50 x 50 Mechanical Panel Dıshwasher

- Stainless steel pressed body and inclined washing tank.
- Drawn tank base housing filter (Hygienic).
- 2.8 l water consumption per cycle.
- Automatic, user friendly control panel.
- Saves energy, detergent and water.
- Washing arms both available in stainless steel and reinforced polypropylene.
- Adjustable feet for height optimization.
- Easy start up: one button to fill in and heat water in the boiler tank.
- Electrical components and cabling according to international standarts and security regulations.
- Completely sealed body to guarantee IPX5 water protection.
- Thermostat-controlled rinse and washing temparature for efficient washing.
- Non-return - Check valve system.
- Washing temperature at 55-60°C (water supply at a minimum of 2 bar and 50°C).
- Rinsing temperature at 80-85 °C (water supply at a minimum of 2 bar and 50°C).

	50 x 50 DISHWASHER CODE							
	OBY 50M P	OBY 50M PD	OBY 50M PT	OBY 50M PDT	OBY 50M PR	OBY 50M PDR	OBY 50M PRT	OBY 50M PDRT
	075M.10000.AD	075M.11000.AD	075M.10010.AD	075M.11010.AD	075M.10100.AD	075M.11100.AD	075M.10110.AD	075M.11110.AD
Rinse Aid Dispenser	√	√	√	√	√	√	√	√
Detergent Dispenser	-	√	-	√	-	√	-	√
Rinsing Pump	-	-	-	-	√	√	√	√
Drain Pump	-	-	√	√	-	-	√	√
2 Baskets Promotional (Plate, Glass and Cutlery)	√	√	√	√	√	√	√	√
Stainless Steel Washing Arms	OPT	OPT	OPT	OPT	OPT	OPT	OPT	OPT

08

TECHNICAL FEATURES			
Electric connection	230V~NPE / 50 Hz	Rinsing pump power	0,25 kW (OBY 50M PR / OBY 50M PDR / OBY 50M PRT / OBY 50M PDRT)
Total rating	5.5 kW	Water inlet pressure / Temp.	2-4 Bar / 50 °C
Washing capacity (plate/hr)	560 plate (Max.)	Heat power (Washing/Rinsing)	2 / 5 kW
Washing capacity (basket/hr)	35 / 18	Dirty water discharge connection	1 1/4" (Ø42 mm) without drain pump models 3/4" (Ø28 mm) with drain pump models
Washing / Boiler tank capacity	27 / 6 l	Maximum noise	75 dBA
Washing program number	2	Gross weight	70 (±5) kg
Program times (seconds)	102 / 192	Dimensions (WxDxH)	595x645x830 mm
Washing water temp.	55-60°C	Protection class	IPX5
Rinsing water temp.	80-85 °C (max.)	Rack dimension	50 x 50 cm
Water inlet connection	3/4 "	Useful loading height	335 mm
Washing pump power	0.66 kW	Inclination	6°

50 x 50 Touch Panel Dishwashers

- Stainless steel pressed body and inclined washing tank .
- Drawn tank base housing filter (Hygienic).
- 2.8 l water consupmtion per cycle.
- Automatic, user friendly control panel. It also includes temperature indicator on the front panel.
- Adjustable detergent / rinse aid time from touch panel.
- Digital pressure switch for washing tank.
- Easy to follow washing steps with dynamic and coloured touch screen .
- Saves energy, detergent and water.
- Washing arms both available in stainless steel and reinforced polypropylene.
- Adjustable feet for height optimization.
- Easy start up: one button to fill in and heat water in the boiler tank.
- Electrical components and cabling according to international standarts and security regulations.
- Completely sealed body to guarantee IPX5 water protection.
- Digital controlled rinse and washing temparature for efficient washing.
- Non-return - Check valve system.
- Washing temperature at 55-60°C (water supply at a minimum of 2 bar and 50°C).
- Rinsing temperature at 80-85°C (water supply at a minimum of 2 bar and 50°C).
- The soft start option enables ultra-sensitive and quiet starting of the program.
- Gentlewash option , Adjustment of washing pressure level with the minimum wear to dishes.

	50 x 50 DISHWASHER CODE							
	OBY 50T P	OBY 50T PD	OBY 50T PT	OBY 50T PDT	OBY 50T PR	OBY 50T PDR	OBY 50T PRT	OBY 50T PDRT
	075T.10000.AD	075T.11000.AD	075T.10010.AD	075T.11010.AD	075T.10100.AD	075T.11100.AD	075T.10110.AD	075T.11110.AD
Rinse Aid Dispenser	√	√	√	√	√	√	√	√
Detergent Dispenser	-	√	-	√	-	√	-	√
Rinsing Pump	-	-	-	-	√	√	√	√
Drain Pump	-	-	√	√	-	-	√	√
2 Baskets Promotional (Plate, Glass and Cutlery)	√	√	√	√	√	√	√	√
Stainless Steel Washing Arms	OPT	OPT	OPT	OPT	OPT	OPT	OPT	OPT
Soft Start	OPT	OPT	OPT	OPT	OPT	OPT	OPT	OPT
Gentlewash	OPT	OPT	OPT	OPT	OPT	OPT	OPT	OPT

For the models do not have rinsing pump, program times are 5 seconds longer.

TECHNICAL FEATURES			
Electric connection	230V~NPE / 50Hz	Rinsing pump power	0,25 kW (OBY 50T PR / OBY 50T PDR / OBY 50T PRT / OBY 50T PDRT)
Total rating	5.5 kW	Water inlet pressure / Temp.	2-4 Bar / 50 °C
Washing capacity (plate/hr)	576 plate (Max.)	Heat power (Washing/Rinsing)	2 / 5 kW
Washing capacity (basket/hr)	36 / 27 / 24 / 21 / 18	Dirty water discharge connection	1 1/4" (Ø42 mm) without drain pump models 3/4" (Ø28 mm) with drain pump models
Washing / Boiler tank capacity	27/6	Maximum noise	75 dBA
Washing program numbers	5	Gross weight	70 (±5) kg
Program times (seconds)	100 / 130 / 150 / 170/ 190	Dimensions (WxDxH)	595x645x830mm
Washing water temp.	55-60°C	Protection class	IPX5
Rinsing water temp.	80-85 °C (max.)	Rack dimension	50 x 50 cm
Water inlet connection	3/4 "	Useful Loading height	335 mm
Washing pump power	0.66 kW	Inclination	6°

50 x 50 King Touch Panel Dishwashers

- Stainless steel pressed body and inclined washing tank.
- Drawn tank base housing filter (Hygienic).
- 2.5 l water consupmtion per cycle.
- Automatic, user friendly control panel. It also includes temperature indicator on the front panel
- Adjustable detergent / rinse aid time from touch panel.
- Digital pressure switch for washing tank.
- Easy to follow washing steps with dynamic and coloured touch screen.
- Saves energy, detergent and water.
- Washing arms both available in stainless steel and reinforced polypropylene.
- Adjustable feet for height optimization.
- Easy start up: one button to fill in and heat water in the boiler tank.
- Electrical components and cabling according to international standarts and security regulations.
- Completely sealed body to guarantee IPX5 water protection.
- Digital controlled rinse and washing temparature for efficient washing.
- Non-return - Check valve system.
- Gentlewash option , Adjustment of washing pressure level with the minimum wear to dishes.
- The soft start option enables ultra-sensitive and quiet starting of the program.
- Washing temperature at 55-60°C (water supply at a minimum of 2 bar and 50°C).
- Rinsing temperature at 80-85 °C (water supply at a minimum of 2 bar and 50°C).
- High efficiency air gap (class AB) in water inlet circuit to avoid water being siphoned back into the network as a result of a sudden drop in main pressures.
- Smart rinse option, atmospheric boiler combine with rinse booster pump offer a perfect rinsing performance in term of constant pressure and high temperature of the water always at same temparature.

	50 x 50 DISHWASHER CODE							
	OBY 50T R R4	OBY 50T RT R4	OBY 50T PR R4	OBY 50T DR R4	OBY 50T DRT R4	OBY 50T PDR R4	OBY 50T PRT R4	OBY 50T PDRT R4
	075T.0010B.AK	075T.0011B.AK	075T.1010B.AK	075T.0110B.AK	075T.0111B.AK	075T.1110B.AK	075T.1011B.AK	075T.1111B.AK
Rinse Aid Dispenser	-	-	√	-	-	√	√	√
Detergent Dispenser	-	-	-	√	√	√	-	√
Rinsing Pump	√	√	√	√	√	√	√	√
Drain Pump	-	√	-	-	√	-	√	√
2 Baskets Promotional (Plate, Glass and Cutlery)	√	√	√	√	√	√	√	√
Stainless Steel Washing Arms	OPT	OPT	OPT	OPT	OPT	OPT	OPT	OPT
Soft Start	OPT	OPT	OPT	OPT	OPT	OPT	OPT	OPT
Gentlewash	OPT	OPT	OPT	OPT	OPT	OPT	OPT	OPT

TECHNICAL FEATURES			
Electric connection	230V~NPE / 50Hz	Rinsing pump power	0,18 kW
Total rating	5.5 kW	Water inlet pressure / Temp.	2-4 Bar / 50 °C
Washing capacity (plate/hr)	576 plate (Max.)	Heat power (Washing/Rinsing)	2 / 5 kW
Washing capacity (basket/ hr)	36/ 28 / 24/ 21 / 19	Dirty water discharge connection	1 1/4" (Ø42 mm) without drain pump models 3/4" (Ø28 mm) with drain pump models
Washing / Boiler tank capacity	27/6	Maximum noise	75 dBA
Washing program numbers	5	Gross weight	70 (±5) kg
Program times (seconds)	98 / 128 / 148 / 168 / 188	Dimensions (WxDxH)	595x645x830mm
Washing water temp.	55-60°C	Protection class	IPX5
Rinsing water temp.	80-85 °C (max.)	Rack dimension	50 x 50 cm
Water inlet connection	3/4 "	Useful Loading height	335 mm
Washing pump power	0.66 kW	Inclination	6°

50 x 50 Eco Touch Type Dishwashers

- Stainless steel pressed body and inclined washing tank.
- Drawn tank base housing filter (Hygienic).
- 2.8 l water consupmtion per cycle.
- Automatic, user friendly control panel. It also includes temperature indicator on the front panel
- Temperature Indication on front panel.
- 3 Selectable Washing Programmes.
- Adjustable detergent / rinse aid time from touch panel.
- Digital pressure switch for washing tank.
- Easy to follow washing steps with dynamic and coloured touch screen.
- Saves energy, detergent and water.
- Washing arms both available in stainless steel and reinforced polypropylene.
- Adjustable feet for height optimization.
- Easy start up: one button to fill in and heat water in the boiler tank.
- Electrical components and cabling according to international standarts and security regulations.
- Completely sealed body to guarantee IPX5 water protection.
- Digital controlled rinse and washing temparature for efficient washing.
- Non-return - Check valve system.
- Washing temperature at 55-60°C (water supply at a minimum of 2 bar and 50°C).
- Rinsing temperature at 80-85°C (water supply at a minimum of 2 bar and 50°C).

	50 x 50 DISHWASHER CODE							
	OBY 50S P	OBY 50S PD	OBY 50S PT	OBY 50S PDT	OBY 50S PR	OBY 50S PDR	OBY 50S PRT	OBY 50S PDRT
	075S.10000.AD	075S.11000.AD	075S.10010.AD	075S.11010.AD	075S.10100.AD	075S.11100.AD	075S.10110.AD	075S.11110.AD
Rinse Aid Dispenser	√	√	√	√	√	√	√	√
Detergent Dispenser	-	√	-	√	-	√	-	√
Rinsing Pump	-	-	-	-	√	√	√	√
Drain Pump	-	-	√	√	-	-	√	√
2 Baskets Promotional (Plate, Glass and Cutlery)	√	√	√	√	√	√	√	√
Stainless Steel Washing Arms	OPT	OPT	OPT	OPT	OPT	OPT	OPT	OPT
For the models do not have rinsing pump, program times are 5 seconds longer.								

TECHNICAL FEATURES			
Electric connection	230V~NPE / 50Hz	Rinsing pump power	0,25 kW (OBY 50S PR / OBY 50S PDR / OBY 50S PRT / OBY 50S PDRT)
Total rating	5.5 kW	Water inlet pressure / Temp.	2-4 Bar / 50 °C
Washing capacity (plate/hr)	560 plate (Max.)	Heat power (Washing/Rinsing)	2 / 5 kW
Washing capacity (basket/hr)	35 / 27 / 18	Dirty water discharge connection	1 1/4" (Ø42 mm) without drain pump models 3/4" (Ø28 mm) with drain pump models
Washing / Boiler tank capacity	27/6	Maximum noise	75 dBA
Washing program numbers	3	Gross weight	70 (±5) kg
Program times (seconds)	102 / 132 / 192	Dimensions (WxDxH)	595x645x830mm
Washing water temp.	55-60°C	Protection class	IPX5
Rinsing water temp.	80-85 °C (max.)	Rack dimension	50 x 50 cm
Water inlet connection	3/4 "	Useful Loading height	335 mm
Washing pump power	0.66 kW	Inclination	6°

50 x 50 Touch Panel Eco Double Walled Dishwashers

- Stainless steel pressed body and inclined washing tank .
- Drawn tank base housing filter (Hygienic).
- 2.8 l water consupmtion per cycle.
- Automatic, user friendly control panel. It also includes temperature indicator on the front panel.
- Adjustable detergent / rinse aid time from touch panel.
- The double skin insulated wall ensures a low noise level and a reduction in heat loss from the machine.
- Digital pressure switch for washing tank.
- Easy to follow washing steps with dynamic and coloured touch screen .
- Saves energy, detergent and water.
- Washing arms both available in stainless steel and reinforced polypropylene.
- Adjustable feet for height optimization.
- Easy start up: one button to fill in and heat water in the boiler tank.
- Electrical components and cabling according to international standarts and security regulations.
- Completely sealed body to guarantee IPX5 water protection.
- Digital controlled rinse and washing temparature for efficient washing.
- Non-return - Check valve system.
- Washing temperature at 55-60°C (water supply at a minimum of 2 bar and 50°C).
- Rinsing temperature at 80-85°C (water supply at a minimum of 2 bar and 50°C).
- The soft start option enables ultra-sensitive and quiet starting of the program.
- Gentlewash option , Adjustment of washing pressure level with the minimum wear to dishes.

	50 x 50 DISHWASHER CODE							
	OBY 50T J P	OBY 50T J PD	OBY 50T J PT	OBY 50T J PDT	OBY 50T J PR	OBY 50T J PDR	OBY 50T J PRT	OBY 50T J PDRT
	075T.10000.AJ	075T.11000.AJ	075T.10010.AJ	075T.11010.AJ	075T.10100.AJ	075T.11100.AJ	075T.10110.AJ	075T.11110.AJ
Rinse Aid Dispenser	√	√	√	√	√	√	√	√
Detergent Dispenser	-	√	-	√	-	√	-	√
Rinsing Pump	-	-	-	-	√	√	√	√
Drain Pump	-	-	√	√	-	-	√	√
2 Baskets Promotional (Plate, Glass and Cutlery)	√	√	√	√	√	√	√	√
Stainless Steel Washing Arms	OPT	OPT	OPT	OPT	OPT	OPT	OPT	OPT
Soft Start	OPT	OPT	OPT	OPT	OPT	OPT	OPT	OPT
Gentlewash	OPT	OPT	OPT	OPT	OPT	OPT	OPT	OPT

For the models do not have rinsing pump, program times are 5 seconds longer.

TECHNICAL FEATURES			
Electric connection	230V~NPE / 50Hz	Rinsing pump power	0,25 kW (OBY 50T J PR / OBY 50T J PDR / OBY 50T J PRT / OBY 50T J PDRT)
Total rating	5.5 kW	Water inlet pressure / Temp.	2-4 Bar / 50 °C
Washing capacity (plate/hr)	576 plate (Max.)	Heat power (Washing/Rinsing)	2 / 5 kW
Washing capacity (basket/hr)	36 / 27 / 24 / 21 / 18	Dirty water discharge connection	1 1/4" (Ø42 mm) without drain pump models 3/4" (Ø28 mm) with drain pump models
Washing / Boiler tank capacity	27/6	Maximum noise	75 dBA
Washing program numbers	5	Gross weight	70 (±5) kg
Program times (seconds)	100 / 130 / 150 / 170/ 190	Dimensions (WxDxH)	610x645x830mm
Washing water temp.	55-60°C	Protection class	IPX5
Rinsing water temp.	80-85 °C (max.)	Rack dimension	50 x 50 cm
Water inlet connection	3/4 "	Useful Loading height	335 mm
Washing pump power	0.66 kW	Inclination	6°

50 x 50 Touch Panel Premium Double Walled Dishwashers

- Stainless steel pressed body and tank, rounded corners for easy cleaning,
- Low water,energy and detergent consumption because of including half tank.
- The counterbalanced door is equipped with shock absorber to lighten the impact of opening and closing.
- Contains stainless steel tank filter .
- A double filter system provides effective wash pump protection.
- Extra increased washing height.
- The double skin insulated wall ensures a low noise level and a reduction in heat loss from the machine.
- 2.8 l water consumption per cycle.
- Automatic, user friendly control panel. It also includes temperature indicator on the front panel
- Adjustable detergent / rinse aid time from touch panel.
- Digital pressure switch for washing tank.
- Easy to follow washing steps with dynamic and coloured touch screen.
- Washing arms both available in stainless steel and reinforced polypropylene.
- Adjustable feet for height optimization.
- Easy start-up: Single button for water filling and heating in the boiler tank.
- Electrical components and cabling according to international standards and safety regulations.
- The dishwasher is completely sealed to guarantee IPX5 water protection.
- Digital controlled rinsing and washing temparatures for efficient washing.
- Non-returned - check valve system.
- Washing temperature at 55-60°C (water supply at a minimum of 2 bar and 50°C).
- Rinsing temperature at 80-85°C (water supply at a minimum of 2 bar and 50°C).
- Gentlewash option , Adjustment of washing pressure level with the minimum wear to dishes.
- The soft start option enables ultra-sensitive and quiet starting of the program.

	50 x 50 DISHWASHER CODE							
	OBY 50T HT P	OBY 50T HT PD	OBY 50T HT PT	OBY 50T HT PDT	OBY 50T HT PR	OBY 50T HT PDR	OBY 50T HT PRT	OBY 50T HT PDRT
	075T.1000A.AA	075T.1100A.AA	075T.1001A.AA	075T.1101A.AA	075T.1010A.AA	075T.1110A.AA	075T.1011A.AA	075T.1111A.AA
Rinse Aid Dispenser	√	√	√	√	√	√	√	√
Detergent Dispenser	-	√	-	√	-	√	-	√
Rinsing Pump	-	-	-	-	√	√	√	√
Drain Pump	-	-	√	√	-	-	√	√
2 Baskets Promotional (Plate, Glass and Cutlery)	√	√	√	√	√	√	√	√
Stainless Steel Washing Arms	OPT	OPT	OPT	OPT	OPT	OPT	OPT	OPT
Soft Start	√	√	√	√	√	√	√	√
Gentlewash	OPT	OPT	OPT	OPT	OPT	OPT	OPT	OPT

For the models do not have rinsing pump, program times are 5 seconds longer.

TECHNICAL FEATURES			
Electric connection	230V-NPE / 50Hz	Rinsing pump power	0,25 kW (OBY 50T HT PR / OBY 50T HT PDR / OBY 50T HT PRT / OBY 50T HT PDRT)
Total rating	5.4 kW	Water inlet pressure / Temp.	2-4 Bar / 50 °C
Washing capacity (plate/hr)	576 plate (Max.)	Heat power (Washing/Rinsing)	2 / 4.75 kW
Washing capacity (basket/hr)	36 / 27 / 24 / 21 / 18	Dirty water discharge connection	1 1/4" (Ø42 mm) without drain pump models 3/4" (Ø28 mm) with drain pump models
Washing / Boiler tank capacity	12/6 l	Maximum noise	65 dBA
Washing program number	5	Gross weight	70 (±5) kg
Program times (seconds)	100 /130 / 150 / 170 / 190	Dimensions (WxDxH)	600x655x830 mm
Washing water temp.	55-60°C	Protection class	IPX5
Rinsing water temp.	80-85 °C (max.)	Rack dimension	50 x 50 cm
Water inlet connection	3/4 "	Useful Loading height	390 mm
Washing pump power	0.66 kW	Inclination	6°

50 x 50 King Touch Panel Premium Double Walled Dishwashers

- Stainless steel pressed body and tank, rounded corners for easy cleaning,
- Low water,energy and detergent consumption because of including half tank.
- The counterbalanced door is equipped with shock absorber to lighten the impact of opening and closing
- Contains Stainless Steel tank filter
- A double filter system provides effective wash pump protection
- Extra increased washing height
- The double skin insulated wall ensures a low noise level and a reduction in heat loss from the machine
- 2.5 l water consumption per cycle.
- Automatic, user friendly control panel. It also includes temperature indicator on the front panel
- Adjustable detergent / rinse aid time from touch panel
- Digital pressure switch for washing tank
- Easy to follow washing steps with dynamic and coloured touch screen
- Washing arms both available in stainless steel and reinforced polypropylene
- Adjustable feet for height optimization
- Easy start-up: Single button for water filling and heating in the boiler tank
- Electrical components and cabling according to international standards and safety regulations
- The dishwasher is completely sealed to guarantee IPX5 water protection
- Digital controlled rinsing and washing temparatures for efficient washing
- Non-returned - check valve system
- Gentlewash option , Adjustment of washing pressure level with the minimum wear to dishes.
- The soft start option enables ultra-sensitive and quiet starting of the program.
- High efficiency air gap (class AB) in water inlet circuit to avoid water being siphoned back into the network as a result of a sudden drop in main pressures.
- Smart rinse option, atmospheric boiler combine with rinse booster pump offer a perfect rinsing performance in term of constant pressure and high temperature of the water always at same temparature.

	50 x 50 DISHWASHER CODE							
	OBY 50T HT R R4	OBY 50T HT RT R4	OBY 50T HT PR R4	OBY 50T HT DR R4	OBY 50T HT DRT R4	OBY 50T HT PDR R4	OBY 50T HT PRT R4	OBY 50T HT PDRT R4
	075T.0010B.AE	075T.0011B.AE	075T.1010B.AE	075T.0110B.AE	075T.0111B.AE	075T.1110B.AE	075T.1011B.AE	075T.1111B.AE
Rinse Aid Dispenser	-	-	√	-	-	√	√	√
Detergent Dispenser	-	-	-	√	√	√	-	√
Rinsing Pump	√	√	√	√	√	√	√	√
Drain Pump	-	√	-	-	√	-	√	√
2 Baskets Promotional (Plate, Glass and Cutlery)	√	√	√	√	√	√	√	√
Stainless Steel Washing Arms	OPT	OPT	OPT	OPT	OPT	OPT	OPT	OPT
Soft Start	√	√	√	√	√	√	√	√
Gentlewash	OPT	OPT	OPT	OPT	OPT	OPT	OPT	OPT

TECHNICAL FEATURES			
Electric connection	230V-NPE / 50Hz	Rinsing pump power	0,18 kW
Total rating	5.4 kW	Water inlet pressure / Temp.	2-4 Bar / 50 °C
Washing capacity (plate/hr)	576 plate (Max.)	Heat power (Washing/Rinsing)	2 / 4.75 kW
Washing capacity (basket/ hr)	36 / 28 / 24 / 21 / 19	Dirty water discharge connection	1 1/4" (Ø42 mm) without drain pump models 3/4" (Ø28 mm) with drain pump models
Washing / Boiler tank capacity	12/6 l	Maximum noise	65 dBA
Washing program number	5	Gross weight	70 (±5) kg
Program times (seconds)	98 / 128 / 148 / 168 / 188	Dimensions (WxDxH)	600x655x830 mm
Washing water temp.	55-60°C	Protection class	IPX5
Rinsing water temp.	80-85 °C (max.)	Rack dimension	50 x 50 cm
Water inlet connection	3/4 "	Useful Loading height	390 mm
Washing pump power	0.66 kW	Inclination	6°

Hood Type Mechanical Panel Dishwashers

- User friendly control panel.
- Monoblock washing tank with round corners for hygienic.
- 69 racks per hour (Rack dimensions 50x50 cm).
- 2.8 l water consumption per cycle.
- Automatic, user friendly electromechanical control panel.
- 3 washing programes- cycle 52/102/132 seconds.
- Washing arms both available in stainless steel and reinforced polypropylene.
- Adjustable feet for height optimization.
- Easy start-up: Single button for water filling and heating in the boiler tank.
- Electrical components and cabling according to international standards and safety regulations.
- The dishwasher is completely sealed to guarantee IPX5 water protection.
- Thermostat-controlled rinsing and washing temparatures for efficient washing.
- Contains stainless steel tank filter.
- Non-returned - check valve system.
- Washing temperature at 55-60°C (water supply at a minimum of 2 bar and 50°C).
- Rinsing temperature at 80-85°C (water supply at a minimum of 2 bar and 50°C).

	HOOD TYPE DISHWASHER CODE						
	OBM 1080M P	OBM 1080M PD	OBM 1080M PDT	OBM 1080M PDR	OBM 1080M PDRT	OBM 1080M R	OBM 1080M RT
	071M.10000.BB	071M.11000.BB	071M.11010.BB	071M.11100.BB	071M.11110.BB	071M.00100.BB	071M.00110.BB
Rinse Aid Dispenser	√	√	√	√	√	-	-
Detergent Dispenser	-	√	√	√	√	-	-
Rinsing Pump	-	-	-	√	√	√	√
Drain Pump	-	-	√	-	√	-	√
3 Baskets Promotional (Plate, Glass and Cutlery)	√	√	√	√	√	√	√
Stainless Steel Washing Arms	OPT	OPT	OPT	OPT	OPT	OPT	OPT

TECHNICAL FEATURES			
Electric connection	400V 3NPE / 50 Hz	Rinsing pump power	0,25 kW (OBM 1080M PDR / OBM 1080M PDRT / OBM 1080M R / OBM 1080M RT)
Total rating	9.66 kW	Water inlet pressure / Temp.	2-4 Bar / 50 °C
Washing capacity (plate/hr)	1108 plate (Max.)	Heat power (Washing/Rinsing)	2 / 9 kW
Washing capacity (basket/hr)	69 / 35 / 27	Dirty water discharge connection	1 1/4" (Ø42 mm) without drain pump models 3/4" (Ø28 mm) with drain pump models
Washing / Boiler tank capacity	23 / 7 l.	Maximum noise	75 dBA
Washing program number	3	Gross weight	120 (±5) kg
Program times (seconds)	52 / 102 / 132	Dimensions (WxDxH)	700x785x1480 (1960) mm
Washing water temp.	55-60°C	Protection class	IPX5
Rinsing water temp.	80-85 °C (max.)	Rack dimension	50 x 50 cm
Water inlet connection	3/4 "	Useful loading height	445 mm
Washing pump power	0.66 kW	Inclination	6°

Hood Type Touch Panel Dishwashers

- User friendly Touch Control Panel.
- Stainless steel body, washing and boiler tank. Contains stainless steel tank filter.
- Monoblock washing tank with round corners - Hygienic.
- 2.8 l water consumption per cycle.
- Adjustable detergent / rinse aid time from touch panel.
- Digital pressure switch for washing tank.
- Easy to follow washing steps with dynamic and coloured touch screen.
- Suitable for corner or in-line installation.
- Washing arms both available in stainless steel and reinforced polypropylene.
- Adjustable feet for height optimization.
- Easy start up: single button for water filling and heating in the boiler tank.
- Electrical components and wiring according to international standarts and security regulations.
- Digital controlled, washing and rinsing temperatures for efficient washing.
- Non-return - Check valve system.
- Digital screen for temperature and error displays.
- Washing temperature at 55-60°C (water supply at a minimum of 2 bar and 50°C).
- Rinsing temperature at 80-85°C (water supply at a minimum of 2 bar and 50°C).
- Gentlewash option , Adjustment of washing pressure level with the minimum wear to dishes.
- The soft start option enables ultra-sensitive and quiet starting of the program.

	HOOD TYPE DISHWASHER CODE						
	OBM 1080T P	OBM 1080T PD	OBM 1080T PDT	OBM 1080T PDR	OBM 1080T PDRT	OBM 1080T R	OBM 1080T RT
	071T.10000.BB	071T.11000.BB	071T.11010.BB	071T.11100.BB	071T.11110.BB	071T.00100.BB	071T.00110.BB
Rinse Aid Dispenser	√	√	√	√	√	-	-
Detergent Dispenser	-	√	√	√	√	-	-
Rinsing Pump	-	-	-	√	√	√	√
Drain Pump	-	-	√	-	√	-	√
3 Baskets Promotional (Plate, Glass and Cutlery)	√	√	√	√	√	√	√
Stainless Steel Washing Arms	OPT	OPT	OPT	OPT	OPT	OPT	OPT
Soft Start	OPT	OPT	OPT	OPT	OPT	OPT	OPT
Gentlewash	OPT	OPT	OPT	OPT	OPT	OPT	OPT

For the models do not have rinsing pump, program times are 5 seconds longer.

TECHNICAL FEATURES			
Electric connection	400V 3NPE / 50 Hz	Rinsing pump power	0,25 kW (OBM 1080T PDR / OBM 1080T PDRT / OBM 1080T R / OBM 1080T RT)
Total rating	9.66 kW	Water inlet pressure / Temp.	2-4 Bar / 50 °C
Washing capacity (plate/hr)	1152 plate (Max.)	Heat power (Washing/Rinsing)	2 / 9 kW
Washing capacity (basket/hr)	72 / 36 / 27 / 24 / 18	Dirty water discharge connection	1 1/4" (Ø42 mm) without drain pump models 3/4" (Ø28 mm) with drain pump models
Washing / Boiler tank capacity	23 / 7 l.	Maximum noise	75 dBA
Washing program number	5	Gross weight	120 (±5) kg
Program times (seconds)	50 / 100 / 130 / 150 / 190	Dimensions (WxDxH)	700x785x1480 (1960) mm
Washing water temp.	55-60°C	Protection class	IPX5
Rinsing water temp.	80-85 °C (max.)	Rack dimension	50 x 50 cm
Water inlet connection	3/4 "	Useful loading height	445 mm
Washing pump power	0.66 kW	Inclination	6°

Hood Type King Touch Panel Dishwashers

- User friendly Touch Control Panel.
- Stainless steel body, washing and boiler tank. Contains stainless steel tank filter.
- Monoblock washing tank with round corners - Hygienic.
- 2,5 l water consumption per cycle.
- Adjustable detergent / rinse aid time from touch panel.
- Digital pressure switch for washing tank.
- Easy to follow washing steps with dynamic and coloured touch screen.
- Suitable for corner or in-line installation.
- Washing arms both available in stainless steel and reinforced polypropylene.
- Adjustable feet for height optimization.
- Easy start up: single button for water filling and heating in the boiler tank.
- Electrical components and wiring according to international standarts and security regulations.
- Digital controlled, washing and rinsing temperatures for efficient washing.
- Non-return - Check valve system.
- Digital screen for temperature and error displays.
- Washing temperature at 55-60°C (water supply at a minimum of 2 bar and 50°C).
- Rinsing temperature at 80-85°C (water supply at a minimum of 2 bar and 50°C).
- Gentlewash option, Adjustment of washing pressure level with the minimum wear to dishes.
- The soft start option enables ultra-sensitive and quiet starting of the program.
- High efficiency air gap (class AB) in water inlet circuit to avoid water being siphoned back into the network as a result of a sudden drop in main pressures.
- Smart rinse option, atmospheric boiler combine with rinse booster pump offer a perfect rinsing performance in term of constant pressure and high temperature of the water always at same temparature.

	HOOD TYPE DISHWASHER CODE						
	OBM 1080T R	OBM 1080T RT	OBM 1080T PR	OBM 1080T DR	OBM 1080T DRT	OBM 1080T PRT	OBM 1080T PDRT
	071T.0010B.BG	071T.0011B.BG	071T.1010B.BG	071T.0110B.BG	071T.0111B.BG	071T.1011B.BG	071T.1111B.BG
Rinse Aid Dispenser	-	-	√	-	-	√	√
Detergent Dispenser	-	-	-	√	√	-	√
Rinsing Pump	√	√	√	√	√	√	√
Drain Pump	-	√	-	-	√	√	√
3 Baskets Promotional (Plate, Glass and Cutlery)	√	√	√	√	√	√	√
Stainless Steel Washing Arms	OPT	OPT	OPT	OPT	OPT	OPT	OPT
Soft Start	OPT	OPT	OPT	OPT	OPT	OPT	OPT
Gentlewash	OPT	OPT	OPT	OPT	OPT	OPT	OPT

TECHNICAL FEATURES			
Electric connection	400V 3NPE / 50 Hz	Rinsing pump power	0,18 kW
Total rating	9.66 kW	Water inlet pressure / Temp.	2-4 Bar / 50 °C
Washing capacity (plate/hr)	1152 plate (Max.)	Heat power (Washing/Rinsing)	2 / 9 kW
Washing capacity (basket/ hr)	72 / 36 / 27 / 24 / 18	Dirty water discharge connection	1 1/4" (Ø42 mm) without drain pump models 3/4" (Ø28 mm) with drain pump models
Washing / Boiler tank capacity	23 / 7 l.	Maximum noise	75 dBA
Washing program number	5	Gross weight	120 (±5) kg
Program times (seconds)	50 / 100 / 130 / 150 / 190	Dimensions (WxDxH)	700x785x1480 (1960) mm
Washing water temp.	55-60°C	Protection class	IPX5
Rinsing water temp.	80-85 °C (max.)	Rack dimension	50 x 50 cm
Water inlet connection	3/4 "	Useful loading height	445 mm
Washing pump power	0.66 kW	Inclination	6°

Hood Type Eco Touch Dishwashers

- User friendly Touch Control Panel.
- Stainless steel body, washing and boiler tank.
- Monoblock washing tank with round corners - Hygienic.
- 2.8 l water consumption per cycle.
- Adjustable detergent / rinse aid time from touch panel.
- Digital pressure switch for washing tank.
- Easy to follow washing steps with dynamic and coloured touch screen.
- Suitable for corner or in-line installation.
- Washing arms both available in stainless steel and reinforced polypropylene.
- Contains stainless steel tank filter.
- Adjustable feet for height optimization.
- Easy start up: single button for water filling and heating in the boiler tank.
- Electrical components and wiring according to international standarts and security regulations.
- Digital controlled, washing and rinsing temperatures for efficient washing.
- Non-return - Check valve system.
- Digital screen for temperature and error displays.
- Washing temperature at 55-60°C (water supply at a minimum of 2 bar and 50°C).
- Rinsing temperature at 80-85°C (water supply at a minimum of 2 bar and 50°C).

	HOOD TYPE DISHWASHER CODE						
	OBM 1080S P	OBM 1080S PD	OBM 1080S PDT	OBM 1080S PDR	OBM 1080S PDRT	OBM 1080S R	OBM 1080S RT
	071S.10000.BB	071S.11000.BB	071S.11010.BB	071S.11100.BB	071S.11110.BB	071S.00100.BB	071S.00110.BB
Rinse Aid Dispenser	√	√	√	√	√	-	-
Detergent Dispenser	-	√	√	√	√	-	-
Rinsing Pump	-	-	-	√	√	√	√
Drain Pump	-	-	√	-	√	-	√
3 Baskets Promotional (Plate, Glass and Cutlery)	√	√	√	√	√	√	√
Stainless Steel Washing Arms	OPT	OPT	OPT	OPT	OPT	OPT	OPT

For the models do not have rinsing pump, program times are 5 seconds longer.

TECHNICAL FEATURES			
Electric connection	400V 3NPE / 50 Hz	Rinsing pump power	0,25 kW (OBM 1080S PDR / OBM 1080S PDRT OBM 1080S R / OBM 1080S RT)
Total rating	9.66 kW	Water inlet pressure / Temp.	2-4 Bar / 50 °C
Washing capacity (plate/hr)	1108 plate (Max.)	Heat power (Washing/Rinsing)	2 / 9 kW
Washing capacity (basket/hr)	69 / 35 / 18	Dirty water discharge connection	1 1/4" (Ø42 mm) without drain pump models 3/4" (Ø28 mm) with drain pump models
Washing / Boiler tank capacity	23 / 7 l.	Maximum noise	75 dBA
Washing program number	3	Gross weight	120 (±5) kg
Program times (seconds)	52 / 102 / 192	Dimensions (WxDxH)	700x785x1480 (1960) mm
Washing water temp.	55-60°C	Protection class	IPX5
Rinsing water temp.	80-85 °C (max.)	Rack dimension	50 x 50 cm
Water inlet connection	3/4 "	Useful loading height	445 mm
Washing pump power	0.66 kW	Inclination	6°

Hood Type Heat Recovery Touch Panel Dishwashers

- User friendly Touch Control Panel.
- Stainless steel body, washing and boiler tank. Contains stainless steel tank filter.
- Monoblock washing tank with round corners - Hygenic.
- 2.8 l water consumption per cycle.
- Afjustable detergent / rinse aid time from touch panel.
- Digital pressure switch for washing tank.
- Easy to follow washing steps with dynamic and coloured touch screen.
- Suitable for corner or in-line installation.
- Washing arms both available in stainless steel and reinforced polypropylene.
- Adjustable feet for height optimization.
- Easy start up: single button for water filling and heating in the boiler tank.
- Electrical components and wiring according to international standarts and security regulations.
- Digital controlled, washing and rinsing temperatures for efficient washing.
- Non-return - Check valve system.
- Digital screen for temperature and error displays.
- Washing temperature at 55-60°C (water supply at a minimum of 2 bar and 50°C).
- Rinsing temperature at 80-85°C (water supply at a minimum of 2 bar and 50°C).
- The heat recovery system provides %25 energy savings.
- The product does not require the use of a hood.
- The heat recovery system improves efficiency by pre-heating the cold inlet water using the energy derived from the hot steam in the machine.
- When the machine is in operation, almost no steam is emitted. Therefore, the use of a hood is not required. Energy savings of up to %25 per washing cycle are achieved.

	HOOD TYPE DISHWASHER CODE						
	OBM 1080T HR R	OBM 1080T HR RT	OBM 1080T HR PR	OBM 1080T HR DR	OBM 1080T HR DRT	OBM 1080T HR PRT	OBM 1080T HR PDRT
	071T.00100.BL	071T.00110.BL	071T.10100.BL	071T.01100.BL	071T.01110.BL	071T.10110.BL	071T.11110.BL
Rinse Aid Dispenser	-	-	√	-	-	√	√
Detergent Dispenser	-	-	-	√	√	-	√
Rinsing Pump	√	√	√	√	√	√	√
Drain Pump	-	√	-	-	√	√	√
3 Baskets Promotional (Plate, Glass and Cutlery)	√	√	√	√	√	√	√
Stainless Steel Washing Arms	OPT	OPT	OPT	OPT	OPT	OPT	OPT

08

TECHNICAL FEATURES			
Electric connection	400V 3NPE / 50 Hz	Rinsing pump power	0,25 kW (OBM 1080T HR PDR / OBM 1080T HR PDRT / OBM 1080T HR R / OBM 1080T HR RT)
Total rating	9.66 kW	Water inlet pressure / Temp.	2-4 Bar / 50 °C
Washing capacity (plate/hr)	1152 plate (Max.)	Heat power (Washing/Rinsing)	2 / 9 kW
Washing capacity (basket/hr)	72 / 36 / 27 / 24 / 18	Dirty water discharge connection	1 1/4" (Ø42 mm) without drain pump models 3/4" (Ø28 mm) with drain pump models
Washing / Boiler tank capacity	23 / 7 l.	Maximum noise	75 dBA
Washing program number	5	Gross weight	120 (±5) kg
Program times (seconds)	50 / 100 / 130 / 150 / 190	Dimensions (WxDxH)	700x785x2030 mm
Washing water temp.	55-60°C	Protection class	IPX5
Rinsing water temp.	80-85 °C (max.)	Rack dimension	50 x 50 cm
Water inlet connection	3/4 "	Useful loading height	445 mm
Washing pump power	0.66 kW	Inclination	6°

OBY 1500 Conveyor Type Mechanical Panel Dishwashers

- Stainless steel body including washing and boiler tank
- Hygienic washing tank
- 100 rack per hour (Rack dimension 50 x 50 cm)
- Effective drying through a high powered fan
- 3 l water consumption per cycle
- Automatic, user friendly control panel
- Continuous washing through conveyor system with dryer (in the model with dryer)
- Saves energy, detergent and water
- Stainless steel washing arms
- Adjustable feet for height optimization
- Easy start up: one button to fill in and heat water in the boiler tank
- Electrical components and cabling according to international standarts and security regulations.
- Completely sealed to guarantee IPX5 water protection
- Thermostat-controlled rinse and washing temparature for efficient washing
- Non-return - Check valve system
- Washing temperature at 55-60°C (water supply at a minimum of 2 bar and 50°C)
- Rinsing temperature at 80-85°C (water supply at a minimum of 2 bar and 50°C)

STANDARD EQUIPMENT	OPTIONAL EQUIPMENT
Stainless Steel Washing Arms	Drain Pump
Rinsing Pump	Detergent Dispenser
5 Baskets Promotional (3x Plate, 1x Glass and 1x Cutlery)	Rinse Aid Dispenser
Flexible Water Supply and Drain Hose	

WITH DRYER UNIT TECHNICAL FEATURES			
Code (right)	076R.0010K.BD	Rinsing pump power	0.37 kW
Code (left)	076L.0010K.BD	Water inlet pressure / Temp.	2-4 Bar / 50 °C
Electric connection	400V-3NPE / 50 Hz	Heat power (Washing/Rinsing)	9 / 27 kW
Total rating	47 kW	Drying fan power	8 kW
Washing capacity (plate/hr)	1650 plate (Max.)	Dirty water discharge con.	1 1/4 ” (Ø 42 mm)
Washing capacity (basket/hr)	100	Maximum noise	80 dBA
Washing / Boiler tank capacity	90 / 18 l	Gross weight	270 (±5) kg
Washing program number	-	Dimensions (LxWxD)	800x2050x1880 mm
Program times	-	Protection class	IPX5
Washing water temp.	55-60°C	Rack dimension	50 x 50 cm
Rinsing water temp.	80-85 °C (max.)	Useful loading height	42 cm
Water inlet connection	3/4 “	Inclination	6°
Washing pump power	1,5 kW		

WITHOUT DRYER UNIT TECHNICAL FEATURES			
Code (right)	076R.00100.BD	Rinsing pump power	0.37 kW
Code (left)	076L.00100.BD	Water inlet pressure / Temp.	2-4 Bar / 50 °C
Electric connection	400V-3NPE / 50Hz	Heat power (Washing/Rinsing)	9 / 27 kW
Total rating	38 kW	Drying fan power	-
Washing capacity (plate/hr)	1650 plate (Max.)	Dirty water discharge con.	1 1/4 ” (Ø 42 mm)
Washing capacity (basket/hr)	100	Maximum noise	80 dBA
Washing / Boiler tank capacity	90 / 18 l	Gross weight	220 (±5) kg
Washing program number	-	Dimensions (LxWxD)	800x1750x1500 mm
Program times	-	Protection class	IPX5
Washing water temp.	55-60°C	Rack dimension	50 x 50 cm
Rinsing water temp.	80-85 °C (max.)	Useful loading height	42 cm
Water inlet connection	3/4 “	Inclination	6°
Washing pump power	1,5 kW		

OBY 2000 Conveyor Type Mechanical Panel Dishwashers

- Stainless steel body including washing and boiler tank
- Hygienic washing tank.
- 133 rack per hour (Rack dimension 50 x 50 cm)
- Effective drying through a high powered fan.
- 3 l water consumption per cycle.
- Automatic, user friendly control panel
- Continuous washing through conveyor system with dryer
- Saves energy, detergent and water
- Stainless steel washing arms
- Adjustable feet for height optimization
- Easy start up: one button to fill in and heat water in the boiler tank
- Electrical components and cabling according to international standards and security regulations
- Completely sealed to guarantee IPX5 water protection
- Thermostat-controlled rinse and washing temparature for efficient washing
- Non-return - Check valve system
- Washing temperature at 55-60°C (water supply at a minimum of 2 bar and 50°C)
- Rinsing temperature at 80-85°C (water supply at a minimum of 2 bar and 50°C)

STANDARD EQUIPMENT	OPTIONAL EQUIPMENT
Stainless Steel Washing Arms	Drain Pump
Rinsing Pump	Detergent Dispenser
5 Baskets Promotional (3x Plate, 1x Glass and 1x Cutlery)	Rinse Aid Dispenser
Flexible Water Supply and Drain Hose	Heat Recovery Unit

WITH DRYER UNIT TECHNICAL FEATURES			
Code (right)	072R.0010K.BD	Main washing pump power	1,5 kW
Code (left)	072L.0010K.BD	Rinsing pump power	0.37 kW
Electric connection	400V-3NPE / 50 Hz	Water inlet pressure / Temp.	2-4 Bar / 50 °C
Total rating	48 kW	Heat power (Washing/Rinsing)	9 / 27 kW
Washing capacity (plate/hr)	2130 plate (Max.)	Drying fan power	8 kW
Washing capacity (basket/hr)	133	Dirty water discharge con.	1 1/4 " (Ø 42 mm)
Pre main washing/Boiler tank capacity	60 / 90 / 18 l	Maximum noise	80 dBA
Washing program number	-	Gross weight	350 (±5) kg
Program times	-	Dimensions (LxWxD)	800x2550x1880 mm
Washing water temp.	55-60°C	Protection class	IPX5
Rinsing water temp.	80-85 °C (max.)	Rack dimension	50 x 50 cm
Water inlet connection	3/4 "	Useful loading height	42 cm
Pre washing pump power	0.72 kW	Inclination	6°

Flight Type Mechanical Panel Dishwashers

Designed for high volume operations
Stainless steel body including washing and boiler tank.
Automatically water power cutting system for washing, rinsing, drying and condensation zones for Energy saving.
Easy installation because of modular system
Digital controlled temperature display on control panel for different modules of the machine.
New designed shape washing tank for perfect washing.
Easily removed filters
Easy service (All mainly components are accessible from the front side of the machine)
Automatic user friendly control panel
Saves energy detergent and water

Stainless steel washing arms
Easy start up,one button to fill in and heat water in the boiler tank.
Adjustable feet for height optimization.
Double rinsing system
Electrical components and cabling according to international standarts and security regulations.
Adjustable secured non-slip, protected conveyor chain drive
Completely sealed to guarantee IPX5 water protection.
Digital thermostat-controlled rinse and washing temparature for eficient washing.
Non-return - Check valve system
Optional unit; Energy Recovery System, captures escaping heat and steam from the exhaust air and reduces energy use

CODE	MODEL	ENTRY	PREWASH	MAINWASH	RINSING	DRYING	EXIT	WIDTH (mm)	LENGHT (mm)	TOTAL HEIGHT (mm)	
										WITHOUT HEAT REGEN	WITH HEAT REGEN.
07AL.0010K.BF	OBF 3000M	1	n/a	1	1	1	1	927	4470	2001	2051
07AR.0010K.BF											
07BL.0010K.BF	OBF 3600M	1	1	1	1	1	1	927	5070	2001	2051
07BR.0010K.BF											
07CL.0010K.BF	OBF 4500M	1	1	2	1	1	1	927	6020	2001	2051
07CR.0010K.BF											
07DL.0010K.BF	OBF 5200M	1	2	1	2	1	1	927	6320	2001	2051
07.DR.0010K.BF											
07EL.0010K.BF	OBF 6000M	1	1	2	2	1	1	927	6620	2001	2051
07ER.0010K.BF											
07FL.0010K.BF	OBF 7000M	1	2	3	2	1	1	927	8170	2001	2051
07FR.0010K.BF											

STANDARD EQUIPMENT	RECOMENDED EQUIPMENT
Rinsing Pump	Detergent Dispencer
Flexible water supply and Drain hose	Rinse Aid Dispencer
	Scrupbing table+socking sink unit 120 cm+prewash hose

TECHNICAL FEATURES						
MODELS	OBF 3000M	OBF 3600M	OBF 4500M	OBF 5200M	OBF 6000M	OBF 7000M
Code Left	07AL.0010K.BF	07BL.0010K.BF	07CL.0010K.BF	07DL.0010K.BF	07EL.0010K.BF	07FL.0010K.BF
Code Right	07AR.0010K.BF	07BR.0010K.BF	07CR.0010K.BF	07DR.0010K.BF	07ER.0010K.BF	07FR.0010K.BF
Dishes Per Hour (pc./h)	3000	3600	4500	5200	6000	7000
Pre-Wash Tank Capacity (l)	-	60	60	2 x 60	60	2 x 60
Wash Tank Capacity (l)	125	125	2 x 125	125	2 x 125	3 x 125
Rinse Tank Capacity (l)	30 + 7	30 + 7	30 + 7	2 x 30	2 x 30	2 x 30
Water Intake Diameter (mm)	3/4"	3/4"	3/4"	3/4"	3/4"	3/4"
Water Intake Pressure (bar)	2-4	2-4	2-4	2-4	2-4	2-4
Washing Water Temperature (°C)	45	45	45	45	45	45
Rinsing Water Temperature (°C)	85	85	85	85	85	85
Electric Intake (V/Hz)	400V/ 3NPE 50 Hz	400V/ 3NPE 50Hz	400V/ 3NPE 50Hz	400V/ 3NPE 50Hz	400V/ 3NPE 50Hz	400V/ 3NPE 50Hz
Pre-Wash Pump Power (kW)	-	0,72	0,72	2 x 0,72	0,72	2 x 0,72
Main Wash Pump Power (kW)	2,7	2,7	2 x 2,7	2,7	2 x 2,7	3 x 2,7
Rinsing Pump Power (kW)	0,37	0,37	0,37	2 x 0,37	2 x 0,37	2 x 0,37
Blower Motor Power (kW)	0,4	0,4	0,4	0,4	0,4	0,4
Heat Regeneration Motor Power (kW)	0,25	0,25	0,25	0,25	0,25	0,25
Conveyor Motor Power (kW)	0,37	0,37	0,37	0,37	0,37	0,37
Main Wash Heating power (kW)	12	12	2 x 12	12	2 x 12	3 x 12
Rinsing Heating power (kW)	2 x 12 + 9	2 x 12 + 9	2 x 12 + 9	4 x 12	4 x 12	4 x 12
Blower Heating Power (kW)	6 x 2	6 x 2	6 x 2	6 x 2	6 x 2	6 x 2
Total Power (kW)	61,09	61,8	76,5	77,9	91,9	107,3
Total Width (mm) (with handles)	927	927	927	927	927	927
Total Lenght (mm)	4470	5070	6020	6320	6620	8170
Total Height (mm)	2001	2001	2001	2001	2001	2001
Total Height (mm) (with Heat Regen.) (mm)	2051	2051	2051	2051	2051	2051
The above table model is organized according to the number of models of the specified machine.						

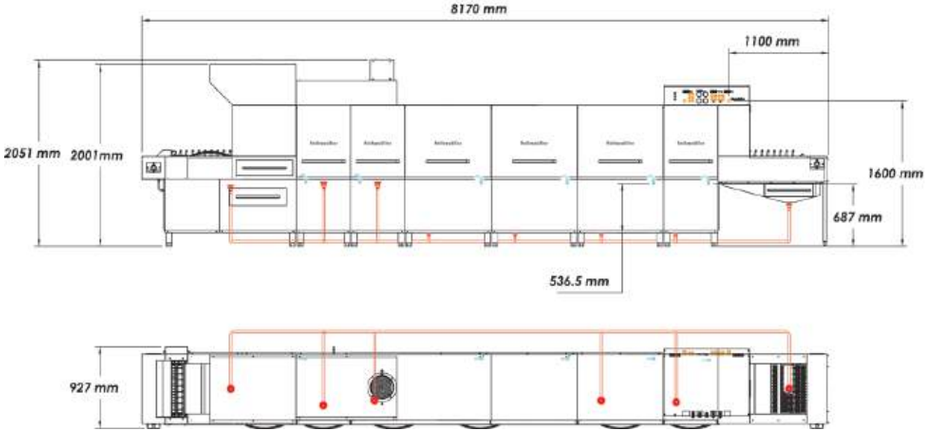

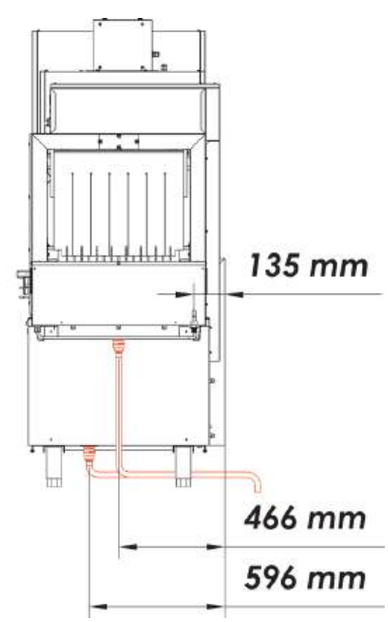

Utensil / Pot Washers

078M.11110.BD	Mechanical Pot Washer	078T.11110.BD	Touch Panel Pot Washer

Stainless Steel Body	Adjustable feet for height optimization
Hygienic washing tank	Easy start up: one button to fill in and heat water in the boiler tank
GN 2/1 washing ability to featured	Electrical components and cabling according to international standads and securit regulations
60 cm in diameter, cylinder-type pot to wash featured	The potwasher is completely sealed to guarantee IPX5 water protection
4.5 l water consumption per cycle	Non-return - Check valve System
3 Washing Programmes	Washing temperature at 55-60°C (water supply at a minimum of 2 bar and 50°C)
Saves energy, detergent and water	Rinsing temperature at 80-85°C (water supply at a minimum of 2 bar and 50°C)
Stainless steel washing arms	
OPTİONAL FUTURES	
MECHANICAL POT WASHER FUTURES	**TOUCH PANEL POT WASHER FUTURES**
Easy to use electromechanical control panel	Automatic, user friendly control panel. It also includes temperature indicator on the front panel.
Thermostat-controlled rinse and washing temparature for efficient washing	Adjustable detergent / rinse aid time from touch panel.
	Digital controlled, washing and rinsing temperatures for efficient washing.
STANDARD EQUIPMENT	
Stainless Steel Washing Arms	Rinse Aid Dispenser
Rinsing Pump	2 Baskets Promotional (Main and inner frame)
Drain Pump	Electrical Connection Cable, Flexible Water Supply and Drain Hose
Detergent Dispenser	

TECHNICAL FEATURES			
Electric connection	400V-3NPE / 50Hz	Rinsing pump power	0.37 kW
Total rating	16.7 kW	Water inlet pressure / Temp.	2-4 Bar / 50 °C
Washing capacity (pan/hr)	600 pan (Max.)	Heat power (Washing/Rinsing)	4,5 / 14 kW
Washing capacity (basket/hr)	30/10/7,5	Dirty water discharge con.	3/4 ” (Ø 28 mm)
Washing / Boiler tank capacity	65 / 18 l	Maximum noise	80 dBA
Washing program number	3	Gross weight	220 (±5) kg
Program times	120/360/480 sec.	Dimensions (WxDxH)	780 x 950 x 1962 (2400) mm
Washing water temp.	55-60°C	Protection class	IPX5
Rinsing water temp.	80-85 °C (max.)	Rack dimension	60 x 70 cm
Water inlet connection	3/4 “	Useful loading height	80 cm
Washing pump power	2.8 kW	Inclination	6°

Vegetable Washing Machine

Stainless steel body	
Washing capacity is 4-6 kg/hour for leaf vegetables and 10-15 kg/hour for root vegetables	
Washing tank is completely stainless steel.	
Washing tank specially designed for easy cleaning and straining.	
Washing pump is made of special plastic material to prevent corrosion and chemical reactions	
TECHNICAL FEATURES	
Code	079M.00000.AD
Electricty connection	230V-NPE / 50 Hz
Total load	0.66 kW
Washing (Leaf vegetables)	4 - 6 kg
Washing (Heavy vegetables, fruits and frozen food)	10 - 15 kg
Washing time	3 - 4 min.
Drying (Leaf vegetables)	-
Drying (Heavy vegetables, fruits and frozen food)	-
Total water consumption	85 l
Water inlet connection	3/4 “
Dirty water discharge connection	1 1/4 “ (Ø 42mm)
Spin dryer motor speed (rpm)	-
Washing tank capacity	97 l
Maximum noise	75 dBA
Gross weight	60 (±5) kg
Dimensions (WxDxH)	700x700x850 mm
Protection class	IPX5
Inclination	6°

Salad and Vegetable Dryer

Stainless steel body	
Time adjustable and thermic protected	
Machine is automatically stopped, when the cover is opened	
Easy to use and clean	
Vegetables are completely dried within a few seconds.	
TECHNICAL FEATURES	
Model	SKM 4035
Code	0840.40035.01
Total load	0.55 kW
Electricty connection	400V 3NPE / 50 Hz
Washing tank capacity	40 l
Weight	53 kg
Dimensions (WxDxH)	560x720x1090 mm

Compartment Glass Rack

CODE	DIMENSIONS			COMPARTMENT
	L	W	H	
8740.0BB09.00	500	500	100	9
8740.0BB16.00	500	500	100	16
8740.0BB25.00	500	500	100	25
8740.0BB36.00	500	500	100	36
8740.0BB49.00	500	500	100	49

Compartment Rack Extender

CODE	DIMENSIONS			COMPARTMENT
	L	W	H	
8740.0BY09.00	500	500	45	9
8740.0BY16.00	500	500	45	16
8740.0BY25.00	500	500	45	25
8740.0BY36.00	500	500	45	36
8740.0BY49.00	500	500	45	49

Rack Base For Plate And Tray

CODE	DIMENSIONS			COMPARTMENT
	L	W	H	
8740.0TB50.00	500	500	100	-

Glass Rack

CODE	DIMENSIONS			COMPARTMENT
	L	W	H	
8740.DBB50.00	500	500	100	-

Cutlery Rack Base For Plate And Tray

CODE	DIMENSIONS			COMPARTMENT
	L	W	H	
8740.CKB50.00	500	500	100	-

Tray Rack

CODE	DIMENSIONS			COMPARTMENT
	L	W	H	
8740.00009.00	500	500	100	-

Plate And Tray Rack Glasswasher 40x40

CODE	DIMENSIONS			COMPARTMENT
	L	W	H	
9740.COD21.50	400	400	110	-

Glass Rack Glasswasher 40x40

CODE	DIMENSIONS			COMPARTMENT
	L	W	H	
9740.COD21.46	400	400	150	-

Glass Rack Glasswasher 35x35

CODE	DIMENSIONS			COMPARTMENT
	L	W	H	
8740.BMS35.00	350	350	150	-

Obf Conveyor Complete For Dishes

CODE	DIMENSIONS			COMPARTMENT
	L	W	H	
6262.00055.05	-	-	-	-

Obf Conveyor Complete For Self-Service Tray

CODE	DIMENSIONS			COMPARTMENT
	L	W	H	
6262.00055.09	-	-	-	-

Obf Conveyor Complete For Dishes (Special Short Type)

CODE	DIMENSIONS			COMPARTMENT
	L	W	H	
6262.00055.10	-	-	-	-

8 Comparment Cutlery Rack

CODE	DIMENSIONS			COMPARTMENT
	L	W	H	
8740.00008.00	450	193	184	-

Basket Trolley

CODE	DIMENSIONS			COMPARTMENT
	L	W	H	
7959.60578.40	-	-	-	-

Pre Wash Hose

CODE	DIMENSIONS			COMPARTMENT
	L	W	H	
8760.MT001.00	-	-	-	-
8760.MT003.00	-	-	-	-

Rinsing Pump

CODE	DIMENSIONS		
	L	W	H
9099.R63T3.30	-	-	-

Drain Pump

CODE	DIMENSIONS		
	L	W	H
9099.P251E.00	-	-	-

Rinse and Detergent Pump

CODE	DIMENSIONS		
	L	W	H
6262.DETP7.NS	-	-	-
6262.PARP8.NS	-	-	-

Reinforced Washing Arms

CODE	DIMENSIONS		
	L	W	H
6262.00033.33	-	-	-

Stainless Steel Washing Arms

CODE	DIMENSIONS			COMPARTMENT
	L	W	H	
2710.00033.33	-	-	-	-

Conveyor Benches

CODE	DIMENSIONS			COMPARTMENT
	L	W	H	
0711.00000.01	-	-	-	-

Corner Conveyor Benches

CODE	DIMENSIONS			COMPARTMENT
	L	W	H	
0711.00000.00	-	-	-	-

Inlet Table

CODE		DIMENSIONS		
RIGHT	LEFT	L	W	H
7711.07075.22	7711.07075.21	700	750	870
7711.09075.22	7711.09075.21	900	750	870
7711.12075.22	7711.12075.21	1200	750	870
7711.14075.22	7711.14075.21	1400	750	870
7711.16075.22	7711.16075.21	1600	750	870
7711.19075.22	7711.19075.21	1900	750	870

Outlet Table

CODE		DIMENSIONS		
RIGHT	LEFT	L	W	H
7711.07075.12	7711.07075.13	700	750	870
7711.09075.12	7711.09075.13	900	750	870
7711.12075.12	7711.12075.13	1200	750	870
7711.14075.12	7711.14075.13	1400	750	870
7711.16075.12	7711.16075.13	1600	750	870
7711.19075.12	7711.19075.13	1900	750	870

ozti
OHY 50
ozti
OHG 40

PREPARATIONS MACHINES

142
Dough Kneading Machines
Planet Mixer (FC)

143
Planet Mixers
Planet Mixers Mechanical Controlling

145
Potato Peelers
Potato Peelers With Filter

146
Potato Peelers With Filter
Filter for Patato Peelers
Potato Chipper

147
Garlic Peelers
Onion Peelers

148
Bowl Cutter Mixers

149
Vertical Cutter Mixers

Dough Kneading Machines

KOD	0820.00030.11			0820.00050.11		
TYPE	OHY 30 TF			OHY 50 TF		
DIMENSION (LxWxH) mm	500	800	1090	590	910	1120
BOWL DIMENSION (ØxH) mm	465		290	540		335
POWER	1.27 kW			2.15 kW		
CAPACITY	30 kg.			50 kg.		
FLOUR CAPACITY	20 kg.			35 kg.		
SUPLY VOLTAGE	400V 3NPE / 50-60 Hz			400V 3NPE / 50-60 Hz		
WEIGHT	142 kg.			167 kg.		

Double reductor, upper reductor has two speed, bottom reductor has single speed.

The ideal machine for kneading all types of dough (pita, pizza, pastry, baklava, patty doughts).

Bowl, safety guard and mixing tools are made of stainless steel.

Automatic shut off if the safety guard is opened during mixing operation.

It operates without noise and vibration.

Main body is electrostatic powder coated.

Planet Mixer (FC)

KOD	0810.00010.14		
TYPE	OM 10 MF		
DIMENSION (LxWxH) mm	510	525	660
BOWL DIMENSION (ØxH) mm	260		205
POWER	0.55 kW		
CAPACITY	10 lt.		
FLOUR CAPACITY	1.5 kg.		
SUPLY VOLTAGE	230V NPE / 50-60 Hz		
WEIGHT	50 kg.		

Main body, mixing tools and bowl are made of stainless steel.

3 different tools for beating, mixing, kneading

It operates with speed control inverter and it can operate in different speeds between 40-210 tour minutes.

It operates without noise and vibration.

The safety guard is switch controlled

Planet Mixers

KOD	0810.00020.03			0810.00040.03			0810.00060.03		
TYPE	OMG 20 TF			OMG 40 TF			OMG 60 TF		
DIMENSION (LxWxH) mm	600	630	1030	680	710	1300	690	820	1310
BOWL DIMENSION (ØxH) mm	310	280		400	415		460	430	
POWER	0.55 kW			1.1 kW			1.5 kW		
CAPACITY	20 lt.			40 lt.			60 lt.		
FLOUR CAPACITY	4 kg.			8 kg.			14 kg.		
SUPLY VOLTAGE	400V 3NPE / 50-60 Hz			400V 3NPE / 50-60 Hz			400V 3NPE / 50-60 Hz		
WEIGHT	135 kg.			196 kg.			216 kg.		

Gearbox transmission system.	3 different tools for beating, mixing kneading.
Increased mixing capacity .	It operates without noise and vibration.
Easily adjustable speed.	0-90 minute timer.
Wider cycle scale (40-160 rpm.)	Automatically stops when adjusted time is over.
All mixing tools and bowl are stainless steel.	The safety guard is switch controlled
Main body is electrostatic powder coated.	

Planet Mixers Mechanical Controlling

KOD	0810.00020.01			0810.00020.04			0810.00040.01			0810.00060.01		
TYPE	OM 20 TF			OM 20 MF			OM 40 TF			OM 60 TF		
DIMENSION (LxWxH) mm	600	630	1000	600	630	1000	680	710	1170	690	820	1250
BOWL DIMENSION (ØxH) mm	310	280		310	280		400	415		460	430	
POWER	0.55 kW			0.55 kW			1.1 kW			1.5 kW		
CAPACITY	20 lt.			20 lt.			40 lt.			60 lt.		
FLOUR CAPACITY	2 kg.			2 kg.			6 kg.			10 kg.		
SUPLY VOLTAGE	400V 3NPE / 50-60 Hz			230V NPE / 50 Hz			400V 3NPE / 50-60 Hz			400V 3NPE / 50-60 Hz		
WEIGHT	98 kg.			98 kg.			173 kg.			193 kg.		

All mixing tools and bowl are stainless steel.
Main body is electrostatic powder coated.
3 different tools for beating, mixing, kneading
It operates without noise and vibration.
Mechanical speed variator.
Machine works with a variator control system three phase models with speed of 40-160 spe./ min., monophose models with speed of 55-160 spe./min.
0-90 minute timer.
Automatically stops when adjusted time is over.
The safety guard is switch controlled.

Standard Accessories

BOWL

BEATING TOOL

MIXING TOOL

KNEADING TOOL

	OM 10	OM 20	OM 40	OM 60
BOWL	2810.00010.31	2810.00020.06	2810.00040.06	2810.00060.06
MIXING TOOL	2810.00010.13	2810.00020.50	2810.00040.49	2810.00060.14
KNEADING TOOL	2810.00010.08	2810.00020.49	2810.00040.48	2810.00060.13
BEATING TOOL	2810.00010.16	2810.00020.53	2810.00040.52	2810.00060.17

Converting Chart of the Accessories

	"20LT./ 10LT. MIXER 10Lt. MIXER TOOLS FOR 20 Lt MIXER"	"40 Lt / 20 Lt. MIXER 20Lt. MIXER TOOLS FOR 40 Lt MIXER"	"60LT./ 40 lt. MIXER 40lt. MIXER TOOLS FOR 60 lt MIXER"
BOWL	2810.20010.00	2810.40020.00	2810.60040.00
MIXING TOOL	2810.20010.01	2810.40020.01	2810.60040.01
KNEADING TOOL	2810.20010.02	2810.40020.02	2810.60040.02
BEATING TOOL	2810.20010.03	2810.40020.03	2810.60040.03

Potato Peelers

KOD	0840.00010.11			0840.00010.14			0840.00020.01			0840.00030.01		
TYPE	PSM 10 TF			PSM 10 MF			PSM 20 TF			PSM 30 TF		
DIMENSION (LxWxH) mm	470	750	890	470	750	890	560	870	990	660	980	1070
POWER	0.75 kW			0.75 kW			1.1 kW			1.5 kW		
CAPACITY	10 lt.			10 lt.			20 lt.			30 lt.		
SUPLY VOLTAGE	400V 3NPE / 50-60 Hz			230V NPE / 50 Hz			400V 3NPE / 50-60 Hz			400V 3NPE / 50-60 Hz		
WEIGHT	41 kg.			41 kg.			64 kg.			84 kg.		

Stainless steel body	It peels and washes the potatoes automatically
Timer stops the machine automatically when adjusted time is over	— PSM 10 model; peels 10 kg. potatoes per times
Compatible with HACCP requirements	— PSM 20 model peels 20 kg. potatoes per times
The engine is thermic protected	— PSM 30 model peels 30 kg. potatoes per times
Evacuation from the front lid	

Potato Peelers With Filter

KOD	0840.00010.21			0840.00020.21			0840.00030.21		
TYPE	PSM 10 TF			PSM 20 TF			PSM 30 TF		
DIMENSION (LxWxH) mm	410	750	1300	510	870	1380	610	980	1480
POWER	0.75 kW			1.1 kW			1.5 kW		
CAPACITY	10 kg.			20 kg.			30 kg.		
SUPLY VOLTAGE	400V 3NPE / 50-60 Hz			400V 3NPE / 50-60 Hz			400V 3NPE / 50-60 Hz		
WEIGHT	54 kg.			82 kg.			106 kg.		

Stainless steel body.	Evacuation from the front lid.
Non-clogging drainaged filter system which was integrated under the machine gather up all patato peelings.	It peels and washes the potatoes automatically.
The engine is thermic protected.	— PSM 10 model peels 10 kg. potatoes per times
Timer stops the machine automatically when adjusted time is over	— PSM 20 model peels 20 kg. potatoes per times.
Compatible with HACCP requirements.	— PSM 30 model peels 30 kg. potatoes per times.

Potato Peelers With Filter

KOD	0840.00010.31			0840.00020.31			0840.00030.31		
TYPE	PSM 10 TF			PSM 20 TF			PSM 30 TF		
DIMENSION (LxWxH) mm	410	750	1260	510	875	1340	610	980	1440
POWER	0.75 kW			1.1 kW			1.5 kW		
CAPACITY	10 kg.			20 kg.			30 kg.		
SUPLY VOLTAGE	400V 3NPE / 50-60 Hz			400V 3NPE / 50-60 Hz			400V 3NPE / 50-60 Hz		
WEIGHT	52 kg.			78 kg.			102 kg.		

Stainless steel body.	Integrated operation feature with potato chipper.
Non-clogging drainaged filter system which was integrated under the machine gather up all patato peelings.	It peels and washes the potatoes automatically.
The engine is thermic protected.	— PSM 10 model peels 10 kg. potatoes per times
Timer stops the machine automatically when adjusted time is over	— PSM 20 model peels 20 kg. potatoes per times.
Compatible with HACCP requirements.	— PSM 30 model peels 30 kg. potatoes per times.
Evacuation from the front lid.	

Filter for Patato Peelers

KOD	
2840.00010.45	PSM 10
2840.00020.45	PSM 20
2840.00030.45	PSM 30

Potato Chipper

KOD	0840.16010.00		
TYPE	PDM		
DIMENSION (LxWxH) mm	410	660	1000
POWER	0.37 kW		
SUPLY VOLTAGE	230 V NPE / 50 Hz		
WEIGHT	54 kg.		

The whole machine is made of stainless steel.
It cuts the potatoes into finger chips with different cross sections.
Ergonomic blade block can be removed and washed easily.
Drum and block are easy to remove.

Blade Block Type

CODE	DIMENSION
2840.16010.03	8x8 mm
2840.16010.04	10x10 mm
2840.16010.05	14x14 mm
2840.16010.06	14x17 mm
2840.16010.09	CRISPY CHIPS

Garlic Peelers

KOD	0840.00005.00		
TYPE	SSM5		
DIMENSION (LxWxH) mm	470	750	890
POWER	0.55 kW		
CAPACITY	5 kg.		
SUPLY VOLTAGE	400V 3NPE/ 50-60 Hz		
WEIGHT	37 kg.		

- Stainless steel body.
- Easy changeable peeler disc made by stainless steel . Peeler disc has self cleaning feature by using a special brush.
- Automatically stops when adjusted time is over.
- The engine is thermic protected.
- Evacuation from the front lid
- It peeles 5 kg. cloves of garlics in 3-7 min according to clove types and sizes and simultaneously washes.
- Peelings are drained easily over drain line of the machine.
- The machine was stabilized by 3 feet that decreases vibrations.
- Transparent polycarbonate cover can be locked easily.
- The machine will not operated as long as the cover was not closed.
- All rotating parts are dynamical balanced for less vibration and higher performance.

Onion Peelers

KOD	0840.00010.33		
TYPE	SSM10		
DIMENSION (LxWxH) mm	510	870	1270
POWER	0.75 kW		
CAPACITY	6-10 kg.		
SUPLY VOLTAGE	400V 3NPE/ 50-60 Hz		
WEIGHT	53 kg.		

- Stainless steel body.
- Easy changeable peeler disc made by stainless steel . Peeler disc has self cleaning feature by using a special brush.
- Non-clogging drainaged filter system which was integrated under the machine gather up all onion peelings.
- Timer stops the machine automatically when adjusted time is over.
- Transparent polycarbonate cover with locking and safety system
- The engine is thermic protected.
- Evacuation from the front lid
- It peels and washes the onions automatically.
- Peeling capacity depends on onion size, type, quality...

Bowl Cutter Mixers

KOD	0830.00010.00		
TYPE	SPM 10 FC		
DIMENSION (LxWxH) mm	340	360	650
POWER	1.5 kW		
SUPLY VOLTAGE	230V NPE / 50-60 Hz		
WEIGHT	39 kg.		
BOWL	10 L		
VARIABLE SPEED	600 - 2800 rpm		

Bowl Cutter Mixers

KOD	0830.00010.02		
TYPE	SPM 10 2-SPD		
DIMENSION (LxWxH) mm	340	360	650
POWE	1 kW-1.3 kW		
SUPLY VOLTAGE	400V 3NPE/50-60 Hz		
WEIGHT	34 kg.		
BOWL	10 L		
DOUBLE SPEED (low/high)	1500 - 3000 rpm		

- Stainless steel body.
- Hummus, vegetable cutter and homogenizer mixer.
- Safety sensor system on the lid and on the bowl.
- Easy to use and ergonomic.
- Quiet and vibration free operation.
- Easy to clean thanks to machines detachable parts.
- Blades are made of hardened stainless steel AISI 420.

Flat / Vegetable, fruit, hummus

CODE	MODEL
2830.00010.05	SPM 10
2830.00020.04	SPM 20
2830.00030.04	SPM 30
2830.00050.04	SPM 50
2830.00070.04	SPM 70

- Blades are made of hardened stainless steel AISI 420.
- Blade types should be chosen according to product model.
- Because, each blade group is designed according to own product type.

Flat / Vegetable, fruit, hummus

CODE	MODEL
2830.N0020.07	SPM N20
2830.N0030.07	SPM N30

- Blades are made of hardened stainless steel AISI 420.
- Blade types should be chosen according to product model.
- Because, each blade group is designed according to own product type.

Vertical Cutter Mixers

KOD	**0830.00020.00**		
TYPE	SPM 20 FC		
DIMENSION (LxWxH) mm	530	700	1270
POWER	2.2 kW		
SUPLY VOLTAGE	230V NPE / 50-60 Hz		
WEIGHT	83 kg.		
BOWL	20 L		
VARIABLE SPEED	600 - 2800 rpm		

Vertical Cutter Mixers

KOD	**0830.00020.02**		
TYPE	SPM 20 2-SPD		
DIMENSION (LxWxH) mm	530	700	1270
POWER	1.8kW-2.2kW		
SUPLY VOLTAGE	400V 3NPE / 50-60 Hz		
WEIGHT	79 kg.		
BOWL	20 L		
DOUBLE SPEED (low/high)	1500 - 3000 rpm		

FC: Frequence Controlled

2-SPD: 2 Speed

Vertical Cutter Mixers

KOD	**0830.00030.00**		
TYPE	SPM 30 FC		
DIMENSION (LxWxH) mm	530	825	1270
POWER	3 kW		
SUPLY VOLTAGE	400V 3NPE / 50-60 Hz		
WEIGHT	87 kg.		
BOWL	30 L		
VARIABLE SPEED	600 - 2800 rpm		

Vertical Cutter Mixers

KOD	**0830.00030.02**		
TYPE	SPM 30 2-SPD		
DIMENSION (LxWxH) mm	530	825	1270
POWER	2,4- 3 kW		
SUPLY VOLTAGE	400V 3NPE / 50-60 Hz		
WEIGHT	82 kg.		
BOWL	30 L		
DOUBLE SPEED (low/high)	1500 - 3000 rpm		

Vertical Cutter Mixers

KOD	0830.00050.00		
TYPE	SPM 50 FC		
DIMENSION (LxWxH) mm	580	920	1285
POWER	7.5 kW		
SUPLY VOLTAGE	400V 3NPE / 50-60 Hz		
WEIGHT	168 kg.		
BOWL	50 L		
VARIABLE SPEED	600 - 2800 rpm		

Vertical Cutter Mixers

KOD	0830.00050.02		
TYPE	SPM 50 2-SPD		
DIMENSION (LxWxH) mm	580	920	1285
POWER	4.7 kW-6 kW		
SUPLY VOLTAGE	400V 3NPE / 50-60 Hz		
WEIGHT	137 kg.		
BOWL	50 L		
DOUBLE SPEED (low/high)	1500 - 3000 rpm		

Vertical Cutter Mixers

KOD	0830.00070.00		
TYPE	SPM 70 FC		
DIMENSION (LxWxH) mm	580	920	1340
POWER	11 kW		
SUPLY VOLTAGE	400V 3NPE / 50-60 Hz		
WEIGHT	174 kg.		
BOWL	70 L		
VARIABLE SPEED	600 - 2800 rpm		

Vertical Cutter Mixers

KOD	0830.00070.02		
TYPE	SPM 70 2-SPD		
DIMENSION (LxWxH) mm	580	920	1340
POWER	6,3 - 7,8 kW		
SUPLY VOLTAGE	400V 3NPE / 50-60 Hz		
WEIGHT	156 kg.		
BOWL	70 L		
DOUBLE SPEED (low/high)	1500 - 3000 rpm		

Vertical Cutter Mixers

KOD	0830.N.00020.00			0830.N.00020.02			0830.N.00030.00			0830.N.00030.02		
TYPE	SPM N20 FC			SPM N20 2-SPD			SPM N30 FC			SPM N30 2-SPD		
DIMENSION (LxWxH) mm	700	540	1270	700	540	1270	700	540	1270	700	540	1270
POWER	2,2 kW			1,8-2,2 kW			3 kW			2,4-3 kW		
SUPLY VOLTAGE	230V NPE / 50-60 Hz			400V 3NPE / 50-60 Hz			400V 3NPE / 50-60 Hz			400V 3NPE / 50-60 Hz		
WEIGHT	91 kg.			91 kg.			95 kg.			95 kg.		
BOWL	20 L			20 L			30 L			30 L		
SPEED	600 / 2800 rpm			1500 / 3000 rpm			600 / 2800 rpm			1500 / 3000 rpm		

ozti

KITCHEN AND SERVICE

154 Plate Dispensers

155 Salad Bar

157 Display Units

164 Built-in Self Service Display Unit

168 Sneeze Guards

170 Mobile Bain - Maries

171 Trolleys

175 Flour and Sugar Trolleys
Dry Product Trolley
Garbage Container

176 Waste Bins

Plate Dispensers

7868.N1.44780.01 **7868.N1.04444.00**

MODEL	CODE	TYPE	L	W	H	POWER	TEMP	CAPACITY	VOLTAGE
	7868.N1.44780.01	80 PLATE - HOT	440	780	850	3 kW	30-90°C	26-32	230V / 50-60 Hz
	7868.N1.44780.00	80 PLATE - NEUTRAL	440	780	850	-	-	26-32	230V / 50-60 Hz
	7868.N1.04444.01	40 PLATE - HOT	440	440	850	1,5 kW	30-90°C	26-32	230V / 50-60 Hz
	7868.N1.04444.00	40 PLATE - NEUTRAL	440	440	850	-	-	26-32	230V / 50-60 Hz

Plate Cartridge

7868.00030.01 **7868.00030.00**

Stainless steel body

Easy to clean

Ergonomic design

Long lasting

Adjustable temperature

Adjustable mechanism (Dimensions between Ø26-Ø32 cm)

Cover

CODE	TYPE	D	H	POWER	TEMP	CAPACITY	VOLTAGE
7868.00030.01	40 PLATE - HOT	430	850	1.5 kW	30-90°C	26-32	230 - 240 V / 50 Hz
7868.00030.00	40 PLATE - NEUTRAL	430	850	-	-	26-32	-

Salad Bar Without Underneath

Salad Bar With Lift

7912.16894.00

Units is made complete stainless steel body. Underneath refrigerator with 2 doors and suitable for

GN 1/1-100 size. Plexiglass roofing can be electrically raised and lowered. Roof light.

Digital thermometer thermostat.

CODE	COATING	TYPE	L	W	H	POWER Monophase	TEMP	WEIGHT	VOLUME	VOLTAGE
7912.16894.O0	OAK	Without	1565	725/1090	900/1440	0.25 kW	+2 / +7°C	80 kg	2.72 m³	230V / 50-60 Hz
7912.16894.M0	MAHOGANY	Without	1565	725/1090	900/1440	0.25 kW	+2 / +7°C	80 kg	2.72 m³	230V / 50-60 Hz
7912.16894.W0	WALNUT	Without	1565	725/1090	900/1440	0.25 kW	+2 / +7°C	80 kg	2.72 m³	230V / 50-60 Hz

!GN CONTAINERS ARE ORDERED SEPERATELY.

Pizza Stand

7ETX.51000.02

CODE	L	W	H	POWER	WEIGHT	DEGREES	SUPLY VOLTAGE
7ETX.51000.02	820	500	600	2 kW	28 kg	+30 +90 thermostat	230V / 50- 60 Hz

Salad Bar With GN Cells Wooden Surface

7EKO.OSBEC.01

Salad Bar With Plate Wooden Surface

7EKO.OSBEC.02

CODE	TYPE	L	W	H	POWER	TEMP.	WEIGHT
7EKO.OSBEC.01	Cold / GN Cells	1565	725/1090	900/1440	0.25 kW	+2 / +7°C	80 kg
7EKO.OSBEH.01	Hot / GN Cells	1565	725/1090	900/1440	0.25 kW	+2 / +7°C	80 kg
7EKO.OSBEC.02	Cold / Plate	1565	725/1090	900/1440	0.25 kW	+2 / +7°C	80 kg
7EKO.OSBEH.02	Hot / / Plate	1570	720	880/1500	0.25 kW	-	125 kg

Pear, Walnut, Teak, Wenge, Kayin, Light Zebrano, Dark Zebrano, Maple, Ebony, Cherry

There may be differences between the printed colors and the actuals colors of the product.

Heated Service Unit

Pool is heated with heating elements located under the pool. 4 pcs.

GN 1/1-150 capacity, wheels. Digital thermometer thermostat.

7912.15894.W0

CODE	COATING	L	W	H	POWER	TEMP.	WEIGHT	VOLTAGE
7912.15894.O0	Oak	1570	720	800/1440	0.25 kW	+70/+80°C	66 kg	230V / 50-60 Hz
7912.15894.M0	Mahogany	1570	720	800/1440	0.25 kW	+70/+80°C	66 kg	230V / 50-60 Hz
7912.15894.W0	Walnut	1570	720	800/1440	0.25kW	+70/+80°C	66 kg	230V / 50-60 Hz

Curved Glass Display Unit

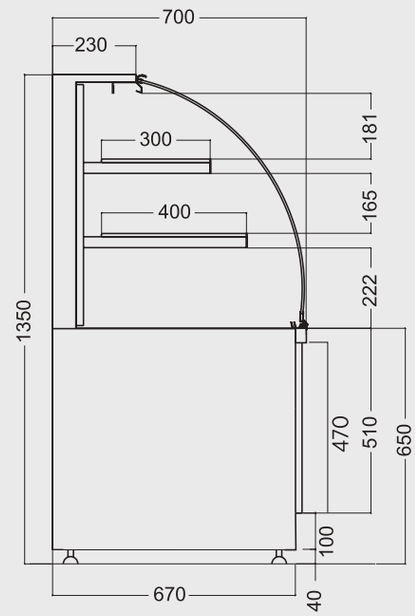

7ETD.11C10.SS

CODE	TYPE	L	W	H	POWER	TEMP.	WEIGHT	CAPACITY	VOLTAGE
7ETD.11C10.SS	Cold	1000	700	1350	0.75 kW - MF	+4 / +6 °C	195 kg	240 lt	230V / 50-60 Hz
7ETD.11C12.SS	Cold	1200	700	1350	0.85 kW - MF	+4 / +6 °C	210 kg	290 lt	230V / 50-60 Hz
7ETD.11C15.SS	Cold	1500	700	1350	0.85 kW - MF	+4 / +6 °C	253 kg	360 lt	230V / 50-60 Hz
7ETD.11C18.SS	Cold	1800	700	1350	0.95 kW - MF	+4 / +6 °C	280 kg	430 lt	230V / 50-60 Hz
7ETD.11C20.SS	Cold	2000	700	1350	1.1 kW - MF	+4 / +6 °C	311 kg	480 lt	230V / 50-60 Hz
7ETD.11H10.SS	HOT	1000	700	1350	2.1 kW - MF	+40 / +45 °C	160 kg	240 lt	230V / 50-60 Hz
7ETD.11H12.SS	HOT	1200	700	1350	2.1 kW - MF	+40 / +45 °C	190 kg	290 lt	230V / 50-60 Hz
7ETD.11H15.SS	HOT	1500	700	1350	2.7 kW - MF	+40 / +45 °C	210 kg	360 lt	230V / 50-60 Hz
7ETD.11H18.SS	HOT	1800	700	1350	2.8 kW - MF	+40 / +45 °C	249 kg	430 lt	230V / 50-60 Hz
7ETD.11H20.SS	HOT	2000	700	1350	2.8 kW - MF	+40 / +45 °C	283 kg	480 lt	230V / 50-60 Hz
7ETD.11N10.SS	Neutral	1000	700	1350	0.03 kW - MF	-	155 kg	240 lt	230V / 50 Hz
7ETD.11N12.SS	Neutral	1200	700	1350	0.04 kW - MF	-	185 kg	290 lt	230V / 50 Hz
7ETD.11N15.SS	Neutral	1500	700	1350	0.05 kW - MF	-	205 kg	360 lt	230V / 50 Hz
7ETD.11N18.SS	Neutral	1800	700	1350	0.06 kW - MF	-	244 kg	430 lt	230V / 50 Hz
7ETD.11N20.SS	Neutral	2000	700	1350	0.07 kW - MF	-	278 kg	480 lt	230V / 50 Hz

!See page 181 for front decor and table options.

Flat Glass Display Unit

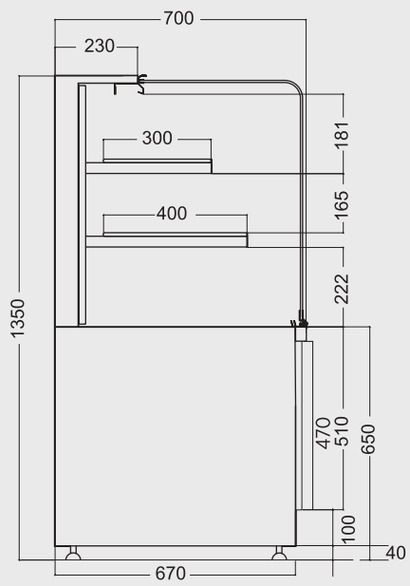

7ETD.12C10.SS

CODE	TYPE	L	W	H	POWER	TEMP.	WEIGHT	CAPACITY	VOLTAGE
7ETD.12C10.SS	Cold	1000	700	1350	0.75 kW - MF	+4 / +6 °C	195 kg	240 lt	230V / 50-60 Hz
7ETD.12C12.SS	Cold	1200	700	1350	0.85 kW - MF	+4 / +6 °C	210 kg	290 lt	230V / 50-60 Hz
7ETD.12C15.SS	Cold	1500	700	1350	0.85 kW - MF	+4 / +6 °C	253 kg	360 lt	230V / 50-60 Hz
7ETD.12C18.SS	Cold	1800	700	1350	0.95 kW - MF	+4 / +6 °C	280 kg	430 lt	230V / 50-60 Hz
7ETD.12C20.SS	Cold	2000	700	1350	1.1 kW - MF	+4 / +6 °C	311 kg	480 lt	230V / 50-60 Hz
7ETD.12H10.SS	HOT	1000	700	1350	2.1 kW - MF	+40 / +45 °C	160 kg	240 lt	230V / 50-60 Hz
7ETD.12H12.SS	HOT	1200	700	1350	2.1 kW - MF	+40 / +45 °C	190 kg	290 lt	230V / 50-60 Hz
7ETD.12H15.SS	HOT	1500	700	1350	2.7 kW - MF	+40 / +45 °C	210 kg	360 lt	230V / 50-60 Hz
7ETD.12H18.SS	HOT	1800	700	1350	2.8 kW - MF	+40 / +45 °C	249 kg	430 lt	230V / 50-60 Hz
7ETD.12H20.SS	HOT	2000	700	1350	2.8 kW - MF	+40 / +45 °C	283 kg	480 lt	230V / 50-60 Hz
7ETD.12N10.SS	Neutral	1000	700	1350	0.03 kW - MF	-	155 kg	240 lt	230V / 50-60 Hz
7ETD.12N12.SS	Neutral	1200	700	1350	0.04 kW - MF	-	185 kg	290 lt	230V / 50-60 Hz
7ETD.12N15.SS	Neutral	1500	700	1350	0.05 kW - MF	-	205 kg	360 lt	230V / 50-60 Hz
7ETD.12N18.SS	Neutral	1800	700	1350	0.06 kW - MF	-	244 kg	430 lt	230V / 50-60 Hz
7ETD.12N20.SS	Neutral	2000	700	1350	0.07 kW - MF	-	278 kg	480 lt	230V / 50-60 Hz

!See page 181 for front decor and table options.

Bent Glass Display Unit

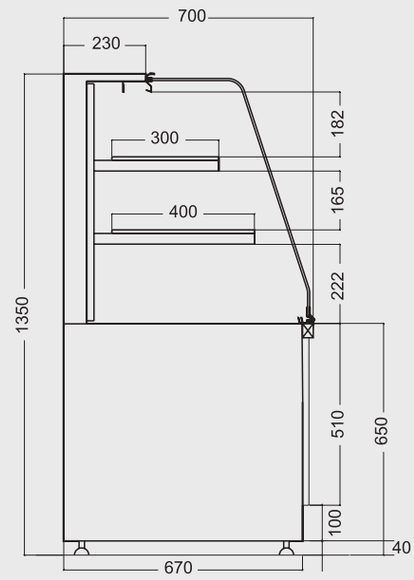

7ETD.13C10.SS

CODE	TYPE	L	W	H	POWER	TEMP.	WEIGHT	CAPACITY	VOLTAGE
7ETD.13C10.SS	Cold	1000	700	1350	0.75 kW - MF	+4 / +6 °C	195 kg	240 lt	230V / 50-60 Hz
7ETD.13C12.SS	Cold	1200	700	1350	0.85 kW - MF	+4 / +6 °C	210 kg	290 lt	230V / 50-60 Hz
7ETD.13C15.SS	Cold	1500	700	1350	0.85 kW - MF	+4 / +6 °C	253 kg	360 lt	230V / 50-60 Hz
7ETD.13C18.SS	Cold	1800	700	1350	0.95 kW - MF	+4 / +6 °C	280 kg	430 lt	230V / 50-60 Hz
7ETD.13C20.SS	Cold	2000	700	1350	1.1 kW - MF	+4 / +6 °C	311 kg	480 lt	230V / 50-60 Hz
7ETD.13H10.SS	HOT	1000	700	1350	2.1 kW - MF	+40 / +45 °C	160 kg	240 lt	230V / 50-60 Hz
7ETD.13H12.SS	HOT	1200	700	1350	2.1 kW - MF	+40 / +45 °C	190 kg	290 lt	230V / 50-60 Hz
7ETD.13H15.SS	HOT	1500	700	1350	2.7 kW - MF	+40 / +45 °C	210 kg	360 lt	230V / 50-60 Hz
7ETD.13H18.SS	HOT	1800	700	1350	2.8 kW - MF	+40 / +45 °C	249 kg	430 lt	230V / 50-60 Hz
7ETD.13H20.SS	HOT	2000	700	1350	2.8 kW - MF	+40 / +45 °C	283 kg	480 lt	230V / 50-60 Hz
7ETD.13N10.SS	Neutral	1000	700	1350	0.03 kW - MF	-	155 kg	240 lt	230V / 50-60 Hz
7ETD.13N12.SS	Neutral	1200	700	1350	0.04 kW - MF	-	185 kg	290 lt	230V / 50-60 Hz
7ETD.13N15.SS	Neutral	1500	700	1350	0.05 kW - MF	-	205 kg	360 lt	230V / 50-60 Hz
7ETD.13N18.SS	Neutral	1800	700	1350	0.06 kW - MF	-	244 kg	430 lt	230V / 50-60 Hz
7ETD.13N20.SS	Neutral	2000	700	1350	0.07 kW - MF	-	278 kg	480 lt	230V / 50-60 Hz

!See page 181 for front decor and table options.

Tubular Glass Display Unit

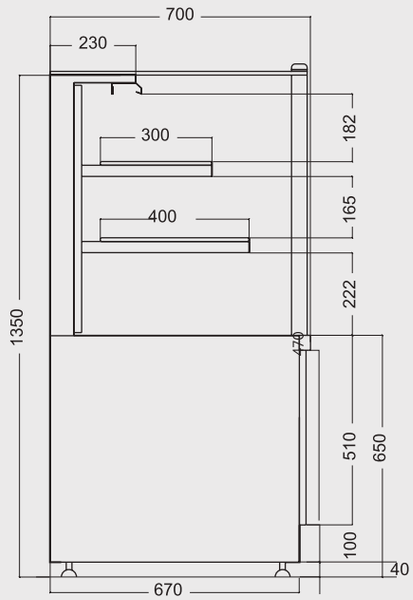

7ETD.14C10.SS

CODE	TYPE	L	W	H	POWER	TEMP.	WEIGHT	CAPACITY	VOLTAGE
7ETD.14C10.SS	Cold	1000	700	1350	0.75 kW - MF	+4 / +6 °C	195 kg	240 lt	230V / 50-60 Hz
7ETD.14C12.SS	Cold	1200	700	1350	0.85 kW - MF	+4 / +6 °C	210 kg	290 lt	230V / 50-60 Hz
7ETD.14C15.SS	Cold	1500	700	1350	0.85 kW - MF	+4 / +6 °C	253 kg	360 lt	230V / 50-60 Hz
7ETD.14C18.SS	Cold	1800	700	1350	0.95 kW - MF	+4 / +6 °C	280 kg	430 lt	230V / 50-60 Hz
7ETD.14C20.SS	Cold	2000	700	1350	1.1 kW - MF	+4 / +6 °C	311 kg	480 lt	230V / 50-60 Hz
7ETD.14H10.SS	HOT	1000	700	1350	2.1 kW - MF	+40 / +45 °C	160 kg	240 lt	230V / 50-60 Hz
7ETD.14H12.SS	HOT	1200	700	1350	2.1 kW - MF	+40 / +45 °C	190 kg	290 lt	230V / 50-60 Hz
7ETD.14H15.SS	HOT	1500	700	1350	2.7 kW - MF	+40 / +45 °C	210 kg	360 lt	230V / 50-60 Hz
7ETD.14H18.SS	HOT	1800	700	1350	2.8 kW - MF	+40 / +45 °C	249 kg	430 lt	230V / 50-60 Hz
7ETD.14H20.SS	HOT	2000	700	1350	2.8 kW - MF	+40 / +45 °C	283 kg	480 lt	230V / 50-60 Hz
7ETD.14N10.SS	Neutral	1000	700	1350	0.03 kW - MF	-	155 kg	240 lt	230V / 50-60 Hz
7ETD.14N12.SS	Neutral	1200	700	1350	0.04 kW - MF	-	185 kg	290 lt	230V / 50-60 Hz
7ETD.14N15.SS	Neutral	1500	700	1350	0.05 kW - MF	-	205 kg	360 lt	230V / 50-60 Hz
7ETD.14N18.SS	Neutral	1800	700	1350	0.06 kW - MF	-	244 kg	430 lt	230V / 50-60 Hz
7ETD.14N20.SS	Neutral	2000	700	1350	0.07 kW - MF	-	278 kg	480 lt	230V / 50-60 Hz

!See page 181 for front decor and table options.

Front Decor

CODE OAK	CODE MAHOGANY	CODE WALNUT	L	H	VOLUME	WEIGHT
7ETX.21A10.00	7ETX.21A10.M0	7ETX.21A10.W0	1000	470	0.04 m^3	3.5 kg
7ETX.21A12.00	7ETX.21A12.M0	7ETX.21A12.W0	1200	470	0.05 m^3	4 kg
7ETX.21A15.00	7ETX.21A15.M0	7ETX.21A15.W0	1500	470	0.06 m^3	5 kg
7ETX.21A18.00	7ETX.21A18.M0	7ETX.21A18.W0	1800	470	0.07 m^3	6 kg
7ETX.21A20.00	7ETX.21A20.M0	7ETX.21A20.W0	2000	470	0.08 m^3	7 kg

Front Decor

CODE OAK	CODE MAHOGANY	CODE WALNUT	L	H	VOLUME	WEIGHT
7ETX.22A06.00	7ETX.22A06.M0	7ETX.22A06.W0	600	660	0.03 m^3	2.8 kg
7ETX.22A09.00	7ETX.22A09.M0	7ETX.22A09.W0	900	660	0.05 m^3	4.2 kg
7ETX.22A10.00	7ETX.22A10.M0	7ETX.22A10.W0	1000	660	0.06 m^3	4.7 kg
7ETX.22A12.00	7ETX.22A12.M0	7ETX.22A12.W0	1200	660	0.07 m^3	5.6 kg
7ETX.22A15.00	7ETX.22A15.M0	7ETX.22A15.W0	1500	660	0.08 m^3	7 kg
7ETX.22A18.00	7ETX.22A18.M0	7ETX.22A18.W0	1800	660	0.09 m^3	8.5 kg
7ETX.22A20.00	7ETX.22A20.M0	7ETX.22A20.W0	2000	660	0.1 m^3	9.4 kg

Self Service Display Unit

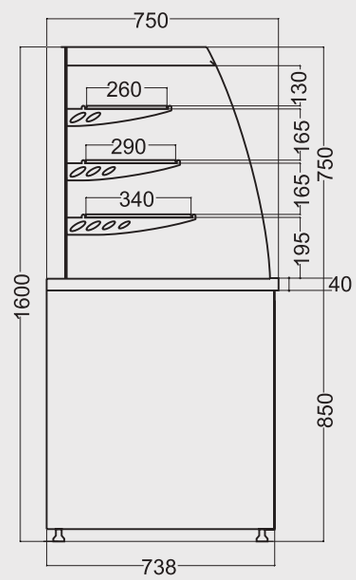

7ETD.25C10.SS

CODE	TYPE	L	W	H	POWER	TEMP.	WEIGHT	CAPACITY	VOLTAGE
7ETD.25C10.SS	Cold	1000	750	1600	0.95 kW - MF	+4 / +6 °C	230 kg	320 lt	230V / 50-60 Hz
7ETD.25C12.SS	Cold	1200	750	1600	1.25 kW - MF	+4 / +6 °C	261 kg	390 lt	230V / 50 Hz
7ETD.25C15.SS	Cold	1500	750	1600	1.25 kW - MF	+4 / +6 °C	286 kg	480 lt	230V / 50 Hz
7ETD.25C18.SS	Cold	1800	750	1600	1.85 kW - MF	+4 / +6 °C	313 kg	580 lt	230V / 50 Hz
7ETD.25C20.SS	Cold	2000	750	1600	1.85 kW - MF	+4 / +6 °C	345 kg	640 lt	230V / 50 Hz
7ETD.25H10.SS	HOT	1000	750	1600	2.1 kW - MF	+40 / +45 °C	200 kg	320 lt	230V / 50-60 Hz
7ETD.25H12.SS	HOT	1200	750	1600	2.1 kW - MF	+40 / +45 °C	228 kg	390 lt	230V / 50-60 Hz
7ETD.25H15.SS	HOT	1500	750	1600	2.8 kW - MF	+40 / +45 °C	251 kg	480 lt	230V / 50-60 Hz
7ETD.25H18.SS	HOT	1800	750	1600	2.8 kW - MF	+40 / +45 °C	278 kg	580 lt	230V / 50-60 Hz
7ETD.25H20.SS	HOT	2000	750	1600	2.8 kW - MF	+40 / +45 °C	303 kg	640 lt	230V / 50-60 Hz
7ETD.25N10.SS	Neutral	1000	750	1600	0.01 kW - MF	-	180 kg	320 lt	230V / 50-60 Hz
7ETD.25N12.SS	Neutral	1200	750	1600	0.01 kW - MF	-	200 kg	390 lt	230V / 50-60 Hz
7ETD.25N15.SS	Neutral	1500	750	1600	0.02 kW - MF	-	230 kg	480 lt	230V / 50-60 Hz
7ETD.25N18.SS	Neutral	1800	750	1600	0.02 kW - MF	-	250 kg	580 lt	230V / 50-60 Hz
7ETD.25N20.SS	Neutral	2000	750	1600	0.03 kW - MF	-	280 kg	640 lt	230V / 50-60 Hz

Wall Type Self Service Display Unit

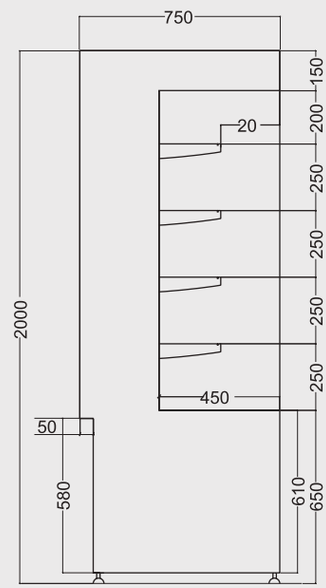

7ETD.35C10.SS

CODE	TYPE	L	W	H	POWER	TEMP.	WEIGHT	CAPACITY	VOLTAGE
7ETD.35C10.SS	Cold	1000	750	2000	0.95 kW - MF	+4 / +6 °C	226 kg	490 lt	230V / 50-60 Hz
7ETD.35C12.SS	Cold	1200	750	2000	1.25 kW - MF	+4 / +6 °C	249 kg	590 lt	230V / 50 Hz
7ETD.35C15.SS	Cold	1500	750	2000	1.25 kW - MF	+4 / +6 °C	270 kg	740 lt	230V / 50 Hz
7ETD.35C18.SS	Cold	1800	750	2000	1.85 kW - MF	+4 / +6 °C	336 kg	880 lt	230V / 50 Hz
7ETD.35C20.SS	Cold	2000	750	2000	1.85 kW - MF	+4 / +6 °C	370 kg	980 lt	230V / 50 Hz
7ETD.35H10.SS	HOT	1000	750	2000	2.6 kW - MF	+40 / +45 °C	176 kg	490 lt	230V / 50-60 Hz
7ETD.35H12.SS	HOT	1200	750	2000	2.6 kW - MF	+40 / +45 °C	199 kg	590 lt	230V / 50-60 Hz
7ETD.35H15.SS	HOT	1500	750	2000	3.4 kW - MF	+40 / +45 °C	270 kg	740 lt	230V / 50-60 Hz
7ETD.35H18.SS	HOT	1800	750	2000	3.5 kW - MF	+40 / +45 °C	281 kg	880 lt	230V / 50-60 Hz
7ETD.35H20.SS	HOT	2000	750	2000	3.5 kW - MF	+40 / +45 °C	300 kg	980 lt	230V / 50-60 Hz
7ETD.35N10.SS	Neutral	1000	750	2000	0.01 kW - MF	-	150 kg	490 lt	230V / 50-60 Hz
7ETD.35N12.SS	Neutral	1200	750	2000	0.01 kW - MF	-	170 kg	590 lt	230V / 50-60 Hz
7ETD.35N15.SS	Neutral	1500	750	2000	0.02 kW - MF	-	250 kg	740 lt	230V / 50-60 Hz
7ETD.35N18.SS	Neutral	1800	750	2000	0.02 kW - MF	-	261 kg	880 lt	230V / 50-60 Hz
7ETD.35N20.SS	Neutral	2000	750	2000	0.03 kW - MF	-	281 kg	980 lt	230V / 50-60 Hz

Built-in Self Service Display Unit

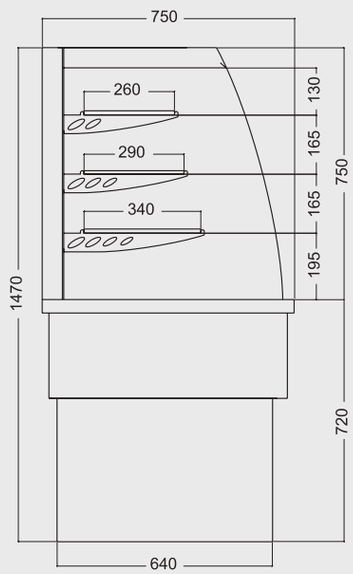

7ETA.21C10.SS

CODE	TYPE	L	W	H	POWER	TEMP.	WEIGHT	CAPACITY	VOLTAGE
7ETA.21C10.SS	Cold	1000	750	720/1470	0.95 kW - MF	+4 / +6 °C	170 kg	320 lt	230V / 50-60 Hz
7ETA.21C12.SS	Cold	1200	750	720/1470	1.25 kW - MF	+4 / +6 °C	200 kg	390 lt	230V / 50 Hz
7ETA.21C15.SS	Cold	1500	750	720/1470	1.25 kW - MF	+4 / +6 °C	220 kg	480 lt	230V / 50 Hz
7ETA.21C18.SS	Cold	1800	750	720/1470	1.85 kW - MF	+4 / +6 °C	240 kg	580 lt	230V / 50 Hz
7ETA.21C20.SS	Cold	2000	750	720/1470	1.85 kW - MF	+4 / +6 °C	260 kg	640 lt	230V / 50 Hz
7ETA.21H10.SS	HOT	1000	750	720/1130	2.1 kW - MF	+40 / +45 °C	125 kg	320 lt	230V / 50-60 Hz
7ETA.21H12.SS	HOT	1200	750	720/1130	2.1 kW - MF	+40 / +45 °C	150 kg	390 lt	230V / 50-60 Hz
7ETA.21H15.SS	HOT	1500	750	720/1130	2.8 kW - MF	+40 / +45 °C	180 kg	480 lt	230V / 50-60 Hz
7ETA.21H18.SS	HOT	1800	750	720/1130	2.8 kW - MF	+40 / +45 °C	215 kg	580 lt	230V / 50-60 Hz
7ETA.21H20.SS	HOT	2000	750	720/1130	2.8 kW - MF	+40 / +45 °C	235 kg	640 lt	230V / 50-60 Hz

Built-in Self Service Mini Display Unit

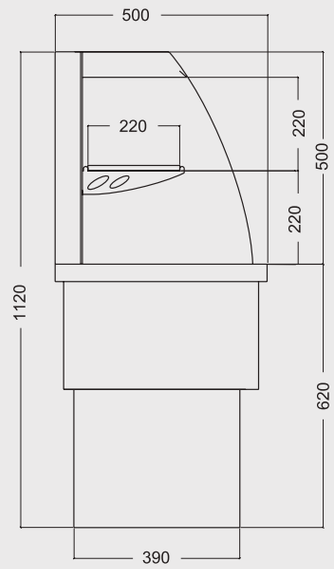

7ETA.22C06.SS

CODE	TYPE	L	W	H	POWER	TEMP.	WEIGHT	CAPACITY	VOLTAGE
7ETA.22C06.SS	Cold	600	500	620/1150	0.9 kW - MF	+4 / +6 °C	100 kg	90 lt	230V / 50 Hz
7ETA.22C09.SS	Cold	900	500	620/1150	0.9 kW - MF	+4 / +6 °C	133 kg	140 lt	230V / 50 Hz
7ETA.22C12.SS	Cold	1200	500	620/1150	0.9 kW - MF	+4 / +6 °C	163 kg	180 lt	230V / 50 Hz
7ETA.22H06.SS	HOT	600	500	620/880	2 kW - MF	40 + 45	70 kg	90 lt	230V / 50-60 Hz
7ETA.22H09.SS	HOT	900	500	620/880	2 kW - MF	40 + 45	89 kg	140 lt	230V / 50-60 Hz
7ETA.22H12.SS	HOT	1200	500	620/880	2 kW - MF	40 + 45	104 kg	180 lt	230V / 50-60 Hz

Built-in Cold Pool

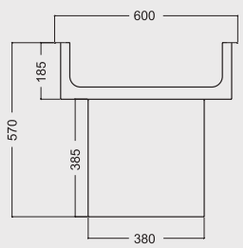

7ETA.11C2G.S2

Built-in Hot Pool

7ETA.11H2G.SS

CODE	CODE	TYPE	MODEL	L	W	H	POWER	TEMP.	WEIGHT	CAPACITY	VOLTAGE
7ETA.11C2G.S2	7ETA.11C2G.SS	Cold	ETA-11C2G -	795	600	520	0.15 kW-MF 0.25 kW-MF	+3 / +5 °C	42 kg	39 lt	230V / 50-60 Hz
7ETA.11C3G.S2	7ETA.11C3G.SS	Cold	ETA-11C3G -	1115	600	520	0.15 kW-MF 0.25 kW-MF	+3 / +5 °C	50 kg	54 lt	230V / 50-60 Hz
7ETA.11C4G.S2	7ETA.11C4G.SS	Cold	ETA-11C4G -	1440	600	520	0.15 kW-MF 0.25 kW-MF	+3 / +5 °C	57 kg	72 lt	230V / 50-60 Hz
7ETA.11C5G.S2	7ETA.11C5G.SS	Cold	ETA-11C5G -	1765	600	520	0.15 kW-MF 0.3 kW-MF	+3 / +5 °C	65 kg	90 lt	230V / 50-60 Hz
7ETA.11C6G.S2	7ETA.11C6G.SS	Cold	ETA-11C6G -	2090	600	520	0.15 kW-MF 0.3 kW-MF	+3 / +5 °C	72 kg	130 lt	230V / 50-60 Hz

CODE	TYPE	L	W	H	POWER	TEMP.	WEIGHT	CAPACITY	VOLTAGE
7ETA.11H2G.SS	HOT	795	600	300	1 kW - MF	+70 / +80 °C	11 kg	36 lt	230V / 50-60 Hz
7ETA.11H3G.SS	HOT	1115	600	300	2 kW - MF	+70 / +80 °C	15 kg	54 lt	230V / 50-60 Hz
7ETA.11H4G.SS	HOT	1440	600	300	2 kW - MF	+70 / +80 °C	19 kg	72 lt	230V / 50-60 Hz
7ETA.11H5G.SS	HOT	1765	600	300	3 kW - MF	+70 / +80 °C	25 kg	90 lt	230V / 50-60 Hz
7ETA.11H6G.SS	HOT	2090	600	300	4 kW - MF	+70 / +80 °C	35 kg	130 lt	230V / 50-60 Hz

Built-in Cold Pool

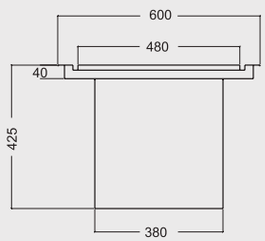

7ETA.12C2G.S2

Built-in Hot Pool

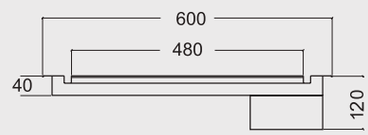

7ETA.11H2G.SS

CODE	CODE	TYPE	MODEL	L	W	H	POWER	TEMP.	WEIGHT	CAPACITY	VOLTAGE
7ETA.12C2G.S2	7ETA.12C2G.SS	Cold	ETA-12C2G -	795	600	520	0.15 kW-MF 0.25 kW-MF	+3 / +5 °C	42 kg	-	230V / 50-60 Hz
7ETA.12C3G.S2	7ETA.12C3G.SS	Cold	ETA-12C3G -	1115	600	520	0.15 kW-MF 0.25 kW-MF	+3 / +5 °C	50 kg	-	230V / 50-60 Hz
7ETA.12C4G.S2	7ETA.12C4G.SS	Cold	ETA-12C4G -	1440	600	520	0.15 kW-MF 0.3 kW-MF	+3 / +5 °C	57 kg	-	230V / 50-60 Hz
7ETA.12C5G.S2	7ETA.12C5G.SS	Cold	ETA-12C5G -	1765	600	520	0.15 kW-MF 0.3 kW-MF	+3 / +5 °C	65 kg	-	230V / 50-60 Hz
7ETA.12C6G.S2	7ETA.12C6G.SS	Cold	ETA-12C6G -	2090	600	520	0.15 kW-MF 0.3 kW-MF	+3 / +5 °C	72 kg	-	230V / 50-60 Hz

CODE	TYPE	L	W	H	POWER	TEMP.	WEIGHT	CAPACITY	VOLTAGE
7ETA.12H2G.SS	HOT	795	600	300	1 kW - MF	+70 / +80 °C	11 kg	-	230V / 50-60 Hz
7ETA.12H3G.SS	HOT	1115	600	300	2 kW - MF	+70 / +80 °C	15 kg	-	230V / 50-60 Hz
7ETA.12H4G.SS	HOT	1440	600	300	2 kW - MF	+70 / +80 °C	19 kg	-	230V / 50-60 Hz
7ETA.12H5G.SS	HOT	1765	600	300	3 kW - MF	+70 / +80 °C	25 kg	-	230V / 50-60 Hz
7ETA.12H6G.SS	HOT	2090	600	300	4 kW - MF	+70 / +80 °C	35 kg	-	230V / 50-60 Hz

Curved Glass Sneeze Guard

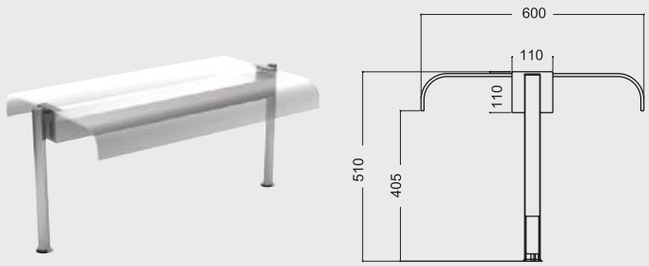

7ETX.11F09.BC

Bent Glass Sneeze Guard

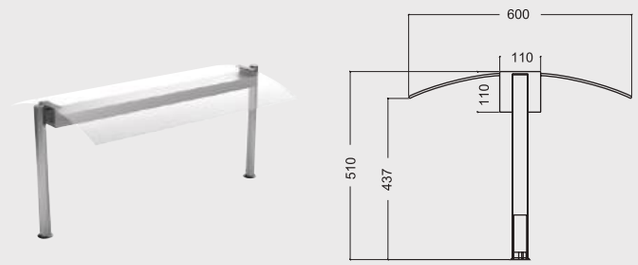

7ETX.11F09.YC

Fluorescent

CODE	MODEL	L	W	H	POWER	TEMP.	WEIGHT	HOLE CENTER	VOLTAGE
7ETX.11F09.BC	CURVED	790	600	510	0.01 kW MF	-	25 kg	1035	230V / 50-60 Hz
7ETX.11F09.YC	BENT								
7ETX.11F12.BC	CURVED	1110	600	510	0.01 kW MF	-	25 kg	1035	230V / 50-60 Hz
7ETX.11F12.YC	BENT								
7ETX.11F15.BC	CURVED	1435	600	510	0.02 kW MF	-	35 kg	1360	230V / 50-60 Hz
7ETX.11F15.YC	BENT								
7ETX.11F18.BC	CURVED	1760	600	510	0.02 kW MF	-	42 kg	1685	230V / 50-60 Hz
7ETX.11F18.YC	BENT								
7ETX.11F20.BC	CURVED	2085	600	510	0.03 kW MF	-	49 kg	2010	230V / 50-60 Hz
7ETX.11F20.YC	BENT								
Led									
7ETX.11L09.BC	CURVED	790	600	510	0.01 kW MF	-	25 kg	1035	230V / 50-60 Hz
7ETX.11L09.YC	BENT								
7ETX.11L12.BC	CURVED	1110	600	510	0.01 kW MF	-	25 kg	1035	230V / 50-60 Hz
7ETX.11L12.YC	BENT								
7ETX.11L15.BC	CURVED	1435	600	510	0.02 kW MF	-	35 kg	1360	230V / 50-60 Hz
7ETX.11L15.YC	BENT								
7ETX.11L18.BC	CURVED	1760	600	510	0.02 kW MF	-	42 kg	1685	230V / 50-60 Hz
7ETX.11L18.YC	BENT								
7ETX.11L20.BC	CURVED	2085	600	510	0.03 kW MF	-	49 kg	2010	230V / 50-60 Hz
7ETX.11L20.YC	BENT								
Hallogen									
7ETX.11H09.BC	CURVED	790	600	510	0.15 kW MF	+30 / +60 °C	26 kg	1035	230V / 50-60 Hz
7ETX.11H09.YC	BENT								
7ETX.11H12.BC	CURVED	1110	600	510	0.3 kW MF	+30 / +60 °C	26 kg	1035	230V / 50-60 Hz
7ETX.11H12.YC	BENT								
7ETX.11H15.BC	CURVED	1435	600	510	0.3 kW MF	+30 / +60 °C	36 kg	1360	230V / 50-60 Hz
7ETX.11H15.YC	BENT								
7ETX.11H18.BC	CURVED	1760	600	510	0.45 kW MF	+30 / +60 °C	44 kg	1685	230V / 50-60 Hz
7ETX.11H18.YC	BENT								
7ETX.11H20.BC	CURVED	2085	600	510	0.6 kW MF	+30 / +60 °C	51 kg	2010	230V / 50-60 Hz
7ETX.11H20.YC	BENT								

Flat Glass Sneeze Guard

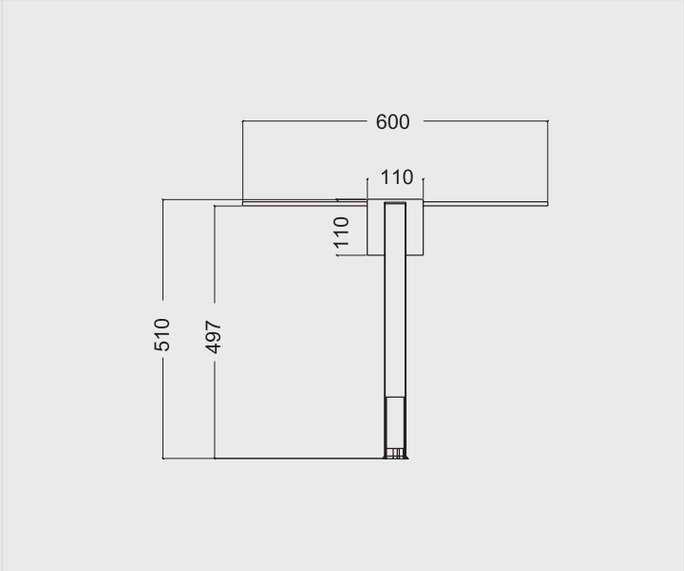

7ETX.11F09.DC

Fluorescent

CODE	L	W	H	POWER	TEMP.	WEIGHT	HOLE CENTER	VOLTAGE
7ETX.11F09.DC	1110	600	510	0.01 kW MF	-	25 kg	1035	230V / 50-60 Hz
7ETX.11F12.DC	1110	600	510	0.01 kW MF	-	25 kg	1035	230V / 50-60 Hz
7ETX.11F15.DC	1435	600	510	0.02 kW MF	-	35 kg	1360	230V / 50-60 Hz
7ETX.11F18.DC	1760	600	510	0.02 kW MF	-	42 kg	1685	230V / 50-60 Hz
7ETX.11F20.DC	2085	600	510	0.03 kW MF	-	49 kg	2010	230V / 50-60 Hz
Led								
7ETX.11L09.DC	1110	600	510	0.01 kW MF	-	25 kg	1035	230V / 50-60 Hz
7ETX.11L12.DC	1110	600	510	0.01 kW MF	-	25 kg	1035	230V / 50-60 Hz
7ETX.11L15.DC	1435	600	510	0.02 kW MF	-	35 kg	1360	230V / 50-60 Hz
7ETX.11L18.DC	1760	600	510	0.02 kW MF	-	42 kg	1685	230V / 50-60 Hz
7ETX.11L20.DC	2085	600	510	0.03 kW MF	-	49 kg	2010	230V / 50-60 Hz
Hallogen								
7ETX.11H09.DC	1110	600	510	0.15 kW MF	+30 / +60 °C	26 kg	1035	230V / 50-60 Hz
7ETX.11H12.DC	1110	600	510	0.3 kW MF	+30 / +60 °C	26 kg	1035	230V / 50-60 Hz
7ETX.11H15.DC	1435	600	510	0.3 kW MF	+30 / +60 °C	36 kg	1360	230V / 50-60 Hz
7ETX.11H18.DC	1760	600	510	0.45 kW MF	+30 / +60 °C	44 kg	1685	230V / 50-60 Hz
7ETX.11H20.DC	2085	600	510	0.6 kW MF	+30 / +60 °C	51 kg	2010	230V / 50-60 Hz

Mobile Bain - Marie With Under Shelf, Front Control Panel

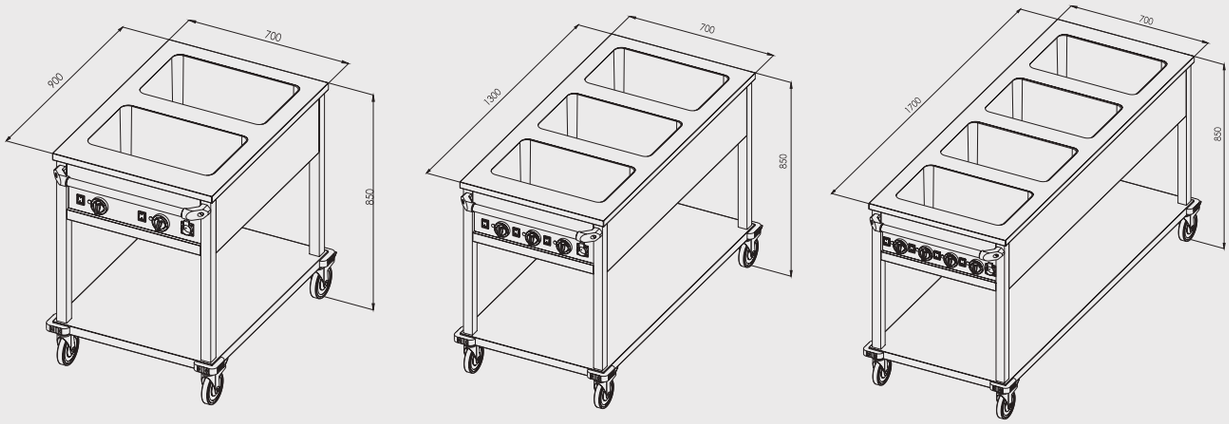

7854.2GN | 3GN | 4GN11.00

Seperately controlled GN pools.

GN 1/1 20 to GN 1/1 150 models compatible.

4 swivel casters, 2 with break.

Tray sliding shelf and upper shelf are optional

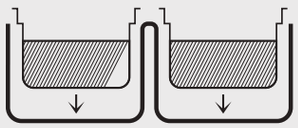

CODE	L	W	H	POWER	TEMP.	CAPACITY	VOLUME	VOLTAGE
7854.2GN11.00	900	700	850	2 kW	30-90°C	2 x GN 1/1 - 150	0.78 m³	230-240V / 50 Hz
7854.3GN11.00	1300	700	850	3 kW	30-90°C	3 x GN 1/1 - 150	1.11 m³	230-240V / 50 Hz
7854.4GN11.00	1700	700	850	4 kW	30-90°C	4 x GN 1/1 - 150	1.44 m³	230-240V / 50 Hz

!GN CONTAINERS ARE ORDERED SEPERATELY.

Mobile Bain-Marie With Cupboard

7854.07128.15

Mobile Bain - Marie With Under Shelf

7854.07098.25

CODE	L	W	H	POWER	TEMP.	CAPACITY	VOLUME	VOLTAGE
7854.07128.15	1200	700	850	2.6 kW	30-90°C	3 x GN 1/1 - 150	1.03 m³	230-240V / 50 Hz
7854.07098.25	900	700	850	1.3 kW	30-90°C	2 x GN 1/1 - 150	0.79 m³	230-240V / 50 Hz

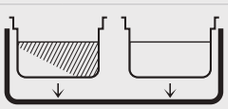

* One piece GN bowl

Bain-Marie Trolley With Serving Bar, 3 Drawer And CapacityOf 3 Pcs GN 1/1

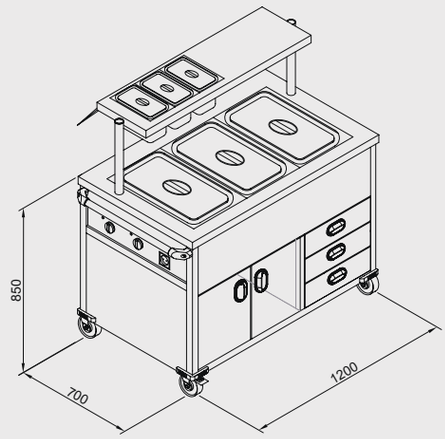

7854.13785.10

CODE	L	W	H	POWER	TEMP.	VOLUME	VOLTAGE
7854.13785.10	1200	700	850/1300	2.6 kW	30-90°C	1.73 m³	230 V / 50 -60 Hz

!GN CONTAINERS ARE ORDERED SEPERATELY.

Rack Trolley

- Stainless steel.
- Manufactured according to the gastronomic size.
- Manufactured with welding system- Easily to demontage / montage by users.
- Easy to clean after use.
- 4 swivel casters, 2 with break.
- Suitable for empty and filled trays for welded - Suitable for empty trays for de mounte

CODE	MODEL	L	W	H	TRAYS	VOLUME
7895.46615.00	40x60 demontage	460	610	1780	20	0.76 m³
7895.46615.01	40x60 welded	460	610	1780	20	0.76 m³
7895.40550.00	GN 1/1 demontage	382	550	1660	17	0.45 m³
7895.40550.01	GN 1/1 welded	382	550	1660	17	0.45 m³
7895.58660.00	GN 2/1 demontage	590	650	1660	17	0.76 m³
7895.58660.01	GN 2/1 welded	590	650	1660	17	0.76 m³

Basket Stacking Trolley

7959.55659.01

CODE	L	W	H	VOLUME
7959.55659.01	550	650	900	0.45 m³

Tray Stacking Trolley

7959.55302.02

CODE	L	W	H	VOLUME
7959.55302.02	550	650	900/1300	0.45 m³

Basket Trolley

7959.55659.01

CODE	L	W	H	VOLUME
7959.60578.40	600	600	850	0.10 m³

Units are made of stainless steel.

Pot Carrying Trolley

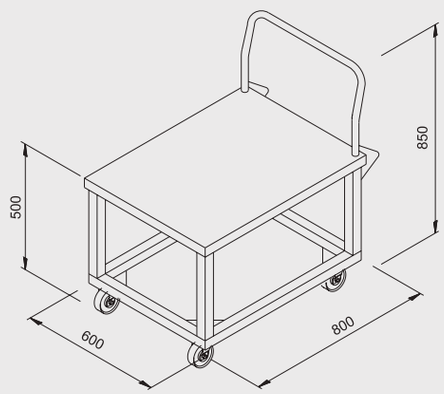

7959.55302.02

CODE	L	W	H	VOLUME
7772.06080.01	600	800	850	0.43 m³

Meat Hanger Trolley

7270.10060 .01

CODE	L	W	H	VOLUME
7270.10060.00	1000	600	1750	1.08 m³
7270.12060.00	1200	600	1750	1.29 m³
7270.14060.00	1400	600	1750	1.51 m³
7270.16060.00	1600	600	1750	1.72 m³
7270.19060.00	1900	600	1750	2.05 m³

Meat hangers are not included.

Plate Trolley

7959.10052.80

CODE	L	W	H	VOLUME	CAPACİTY
7959.10052.80	980	500	780	0.44 m³	150 plate

Units are made of stainless steel.

Cargo Carrying Trolley

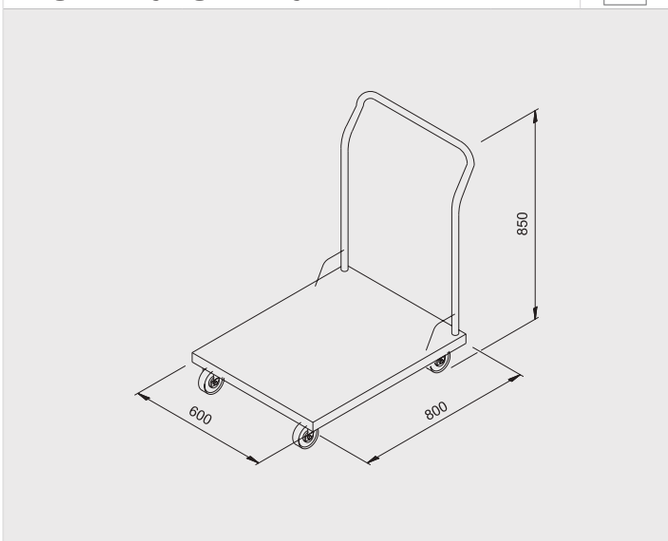

7772.06080.00

CODE	L	W	H	VOLUME
7772.06080.00	600	800	850	0.43 m³

Stainless Steel Meat Hanger

8360.00007.08

10

Dirty Dish Trolley

7959.87579.50

CODE	L	W	H	VOLUME
7959.87579.50	800	550	850	0.76 m³

Service Trolley Two Shelves

0913.00507.01

CODE	L	W	H	VOLUME
0913.00507.01	550	800	850	0.14 m³

Service Trolley Three Shelves

0913.00508.01

CODE	L	W	H	VOLUME
0913.00508.01	550	800	850	0.14 m³

Meat and Vegetable Trolley

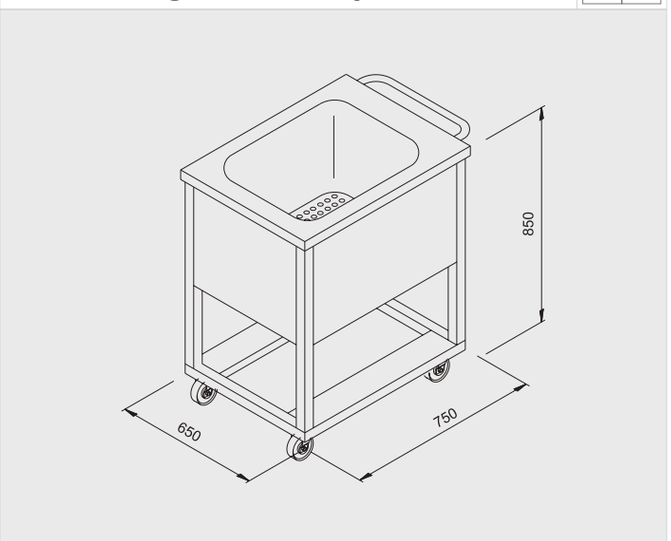

7959.65758.00

CODE	L	W	H	VOLUME
7959.65758.00	650	750	850	0.50 m³

Flour and Sugar Trolleys

7370.50505.80

CODE	L	W	H	VOLUME
7370.50505.80	500	500	610	0.20 m³

Flour and Sugar Trolleys

7370.64436.80

CODE	L	W	H	VOLUME
7370.64436.80	450	650	660	0.26 m³

Dry Product Trolley

8913.IBS27.148

CODE	L	W	H	VOLUME
8913.IBS27.148	750	420	710	0.102 m3

Garbage Container

8893.00120.00

CODE	CAPACITY	L	W	H
8893.00120.00	120 lt.	240	770	-
8893.00240.00	240 lt.	240	770	-
8893.00770.00	770 lt.	240	770	-

Waste Bin With Pedal

5 lt	13 lt	16 lt
CODE	**CAPACITY**	**VOLUME**
8893.00405.00	5 lt	0.06 m^3
8893.00413.00	13 lt	0.15 m^3
8893.00416.00	16 lt	0.17 m^3

Waste Bin With Pedal

54 lt	78 lt	104 lt
CODE	**CAPACITY**	**VOLUME**
8893.04050.00	54 lt	0.65 m^3
8893.04070.00	78 lt	0.85 m^3
8893.04090.00	104 lt	1.10 m^3

Waste Trolley

7959.87579.50

CODE	CAPACITY	Q	H	VOLUME
0893.04040.01	50 lt	400	400	0.13 m^3

Units are made of stainless steel.

SERVING COUNTERS

180 Serving Counter

181 Wooden Decorated Serving Counter

183 Cutlery Counter Shelf Options

Hot Serving Counter With GN 1/1 Cells

7912.1207.00

CODE	L	W	H	POWER	TEMP	CAPACITY	VOLUME	VOLTAGE
7912.12070. 00	1200	700	850	2.6 kW	30-90°C	3xGN 1/1-150	1 m³	230V / 50 Hz
7912.15070.00	1500	700	850	2.6 kW	30-90°C	4xGN 1/1-150	1.23 m³	230V / 50 Hz
7912.19070.00	1900	700	850	3.9 kW	30-90°C	5xGN 1/1-150	1.54 m³	230V / 50 Hz
7912.12070.10	1200	700	850	4.1 kW	30-90°C	3xGN 1/1-150	1 m³	220 V / 50 Hz
7912.15070.10	1500	700	850	4.1 kW	30-90°C	4xGN 1/1-150	1.23 m³	220 V / 50 Hz
7912.19070.10	1900	700	850	6.9 kW Trifaze	30-90°C	5xGN 1/1-150	1.54 m³	400 V / 50 Hz

!GN CONTAINERS ARE ORDERED SEPERATELY.

Neutral Serving Counter With Under Shelf Without Door

CODE	L	W	H	VOLUME
7911.12070.80	1200	700	850	1 m³
7911.14070.80	1400	700	850	1.23 m³
7911.16070.80	1600	700	850	1.54 m³
7911.19070.80	1900	700	850	1.93 m³

7911.12070.80

Cold Serving Counter

CODE	L	W	H	POWER	TEMP.	VOLTAGE	CAPACITY	VOLUME
7919.27NTV.24	1420	700	850	0.57kW	+2 / +5	220 V	4xGN 1/1-150	1.17 m³
7919.37NTV.24	1880	700	850	0.88kW	+2 / +5	220 V	5xGN 1/1-150	1.53 m³

7919.27NTV.24

NTV: Ventilated refrigeration at regular temperature.

Ambient temperature: +32.2 C° Relative humidity: %65

Wooden Decorated Hot Serving Counter With GN Sized Cells

7912.12070.A0

Oak Mahogan Walnu

CODE	L	W	H	POWER	TEMP.	VOLUME	CAPACITY	VOLTAGE
7912.12070.A0	1200	700	850	2.6 kW	30-90°C	1.50 m³	3 x GN 1/1 - 150	230-240V / 50 Hz
7912.15070.A0	1500	700	850	2.6 kW	30-90°C	1.85 m³	4 x GN 1/1 - 150	230-240V / 50 Hz
7912.19070.A0	1900	700	850	3.9 kW	30-90°C	2.3 m³	5 x GN 1/1 - 150	230-240V / 50 Hz
7912.12070.A1	1200	700	850	4.1 kW	30-90°C	1.50 m³	3 x GN 1/1 - 150	230-240V / 50 Hz
7912.15070.A1	1500	700	850	4.1 kW	30-90°C	1.85 m³	4 x GN 1/1 - 150	230-240V / 50 Hz
7912.19070.A1	1900	700	850	6.9 kW Trifaze	30-90°C	2.3 m³	5 x GN 1/1 - 150	400V / 50 Hz

!GN CONTAINERS ARE ORDERED SEPERATELY.

Wooden Decorated Neutral Serving Counter

CODE	L	W	H	VOLUME
7912.12078.A8	1200	700	850	0.13 m³
7912.14078.A8	1400	700	850	0.14 m³
7912.16078.A8	1600	700	850	0.16 m³
7912.19078.A8	1900	700	850	0.17 m³

7912.12078.A8

!GN CONTAINERS ARE ORDERED SEPERATELY.

Wooden Decorated Cold Serving Counter With GN Sized Cells

CODE	L	W	H	POWER	TEMP.	VOLTAGE	CAPACITY	VOLUME
7919.27NTV.A4	1420	700	850	0.57kW	+2 / +5	230V / 50 Hz	4xGN 1/1-150	1.71 m³
7919.37NTV.A4	1880	700	850	0.88kW	+2 / +5	230V / 50 Hz	5xGN 1/1-150	1.53 m³

7919.27NTV.A4

NTV: Air ventilated refrigeration at regular temperature.

Ambient temperature: +32.2 C° Relative humidity: %65

Corner Bench With Shelf

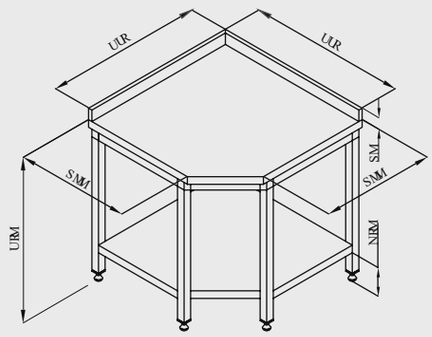

7911.06060.81K

Corner Bench With Cabinet

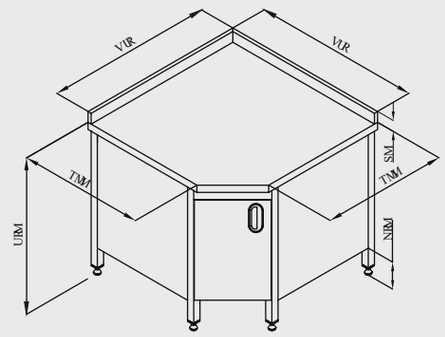

7911.06060.12K

CODE	MODEL	L	W	H	VOLUME
7911.06060.81K	Neutral - Shelf	885	885	850	0.94 m³
7911.07070.81K	Neutral - Shelf	985	985	850	1.06 m³
7911.06060.12K	Neutral - Cabinet	885	885	850	0.94 m³
7911.07070.12K	Neutral - Cabinet	985	995	850	1.06 m³

Angled, Wooden Decorated Neutral Serving Counter

7912.15078.30A

CODE	L	W	H	VOLUME
7912.15078.30A	1500	700	850	2.26 m³

Neutral Cutlery Counter

7912.07070.50

CODE	L	W	H	VOLUME
7912.07070.50	700	700	850 / 1380	0.94 m³
7912.08070.50	800	700	850 / 1380	1.06 m³
7912.10070.50	1000	700	850 / 1380	1.3 m³

!GN CONTAINERS ARE ORDERED SEPERATELY.

Wooden Decorated Cutlery Counter

7912.07070.51

CODE	L	W	H	VOLUME
7912.07070.51	700	700	850 / 1380	0.94 m³
7912.08070.51	800	700	850 / 1380	1.06 m³
7912.10070.51	1000	700	850 / 1380	1.3 m³

Shelf Options

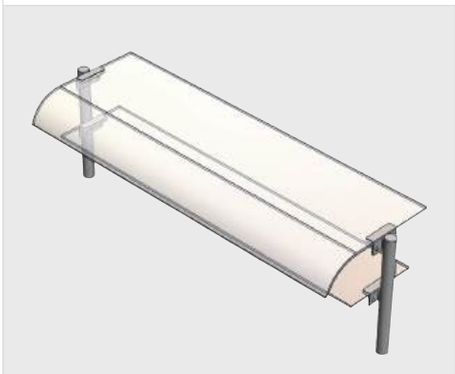

7897.12030.03

CODE	L	W	H	VOLUME
7897.12030.04	1200	370	730	0.18 m³
7897.14030.04	1400	370	730	0.22 m³
7897.15030.04	1500	370	730	0.23 m³
7897.16030.04	1600	370	730	0.25 m³
7897.19030.04	1900	370	730	0.29 m³

Double curved glass serving shelf

CODE	L	W	H	VOLUME
7897.12030.03	1200	370	470	0.13 m³
7897.14030.03	1400	370	470	0.14 m³
7897.15030.03	1500	370	470	0.16 m³
7897.16030.03	1600	370	470	0.17 m³
7897.19030.03	1900	370	470	0.19 m³

Curved glass serving shelf

CODE	L	W	H	VOLUME
7897.12030.08	1200	370	730	0.13 m³
7897.14030.08	1400	370	730	0.14 m³
7897.15030.08	1500	370	730	0.16 m³
7897.16030.08	1600	370	730	0.17 m³
7897.19030.08	1900	370	730	0.19 m³

Serving shelf

Plinth For Serving Counter

7999.07015.80

CODE	L	W	H
7999.07015.80	700	15	140
7999.08015.80	800	15	140
7999.10015.80	1000	15	140
7999.12015.80	1200	15	140
7999.14015.80	1400	15	140
7999.15015.80	1500	15	140
7999.16015.80	1600	15	140
7999.19015.80	1900	15	140

Tray Sliding Shelf

7897.12030.05

CODE	L	W	VOLUME
7897.12030.05	1200	300	0.08 m³
7897.14030.05	1400	300	0.10 m³
7897.15030.05	1500	300	0.11 m³
7897.16030.05	1600	300	0.12 m³
7897.19030.05	1900	300	0.14 m³

Double Serving Counter

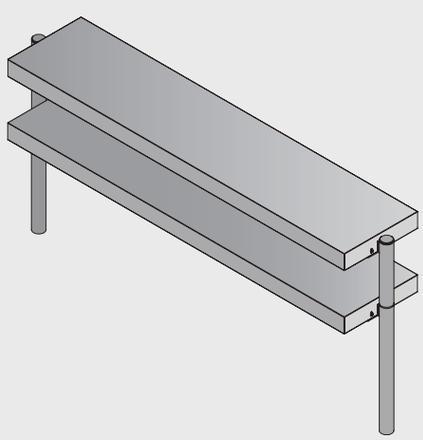

7897.12030.07

CODE	L	W	H
7897.12030.07	1200	300	730
7897.14030.07	1400	300	730
7897.15030.07	1500	300	730
7897.16030.07	1600	300	730
7897.19030.07	1900	300	730

Single Upper Shelf

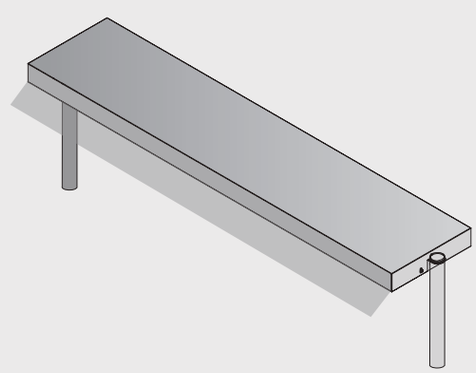

7897.12030.02

CODE	L	W	H	VOLUME
7897.12030.02	1200	300	470	0.33 m³
7897.14030.02	1400	300	470	0.38 m³
7897.15030.02	1500	300	470	0.41 m³
7897.16030.02	1600	300	470	0.43 m³
7897.19030.02	1900	300	470	0.50 m³

SÁRDUNYA

SINK UNITS

188 Hand Washing Sink

190 Sink Bowls

192 Sink Tops

194 Sink Units

205 Bar and Coctail Station

207 Inlet-Outlet Tables for Dishwashing

208 Scrapping Tables

209 Working Benches

214 Wall Mounted Cupboard and Shelves

216 Storage Shelf

217 Hoods

221 Floor Drains

7759.50393.92

Wall Mounted, Knee Operated Hand Washing Sink

CODE		L	W	H	WATER INLET CONNECTION
7759.50393.90	with mechanism	500	390	230	SINGLE
7759.50393.91	with mechanism	500	390	230	HOT/COLD
7759.50393.92	without mechanism	500	390	230	

7759.40332.30

Wall Mounted, Knee Operated Hand Washing Sink

CODE		L	W	H	WATER INLET CONNECTION
7759.40332.31	with mechanism	400	330	230	SINGLE
7759.40332.35	with mechanism	400	330	230	HOT/COLD
7759.40332.30	without mechanism	400	390	230	

7759.50392.90

Wall mounted hand washing sink

CODE	L	W	H	WATER INLET CONNECTION
7759.50392.90	500	390	290	SINGLE

0759.04031.00

Wall Mounted Hand Washing Sink

CODE	L	W	H	WATER INLET CONNECTION
0759.04031.00	500	390	230	SINGLE

0759.40311.31

Wall Mounted Hand Washing Sink

CODE	L	W	H	WATER INLET CONNECTION
0759.40311.31	400	310	190	-

0753.35402.10

Rectangular Bowl

CODE	L	W	H	WATER INLET CONNECTION
0753.35402.10	355	105	190	-

0753.03436.08

Rectangular Bowl

CODE	L	W	H	WATER INLET CONNECTION
0753.03436.08	345	375	140	-

0753.40402.10

Rectangular Bowl

CODE	L	W	H	CODE	L	W	H	CODE	L	W	H
0753.40402.10	400	400	250	0753.40503.10	400	500	300	0753.50602.10	500	600	250
0753.40403.10	400	400	300	0753.45602.10	450	600	250	0753.50603.10	500	600	300
0753.45452.10	450	450	250	0753.45603.10	450	600	300	0753.60602.10	600	600	250
0753.45453.10	450	450	300	0753.50502.10	500	500	250	0753.60603.10	600	600	300
0753.40502.10	450	500	250	0753.50503.10	500	500	300	0753.70702.10	700	700	250

0753.00023.09

Round sink bowl

CODE	Ø	H
0753.00023.09	230	105
0753.00026.09	260	105
0753.00029.09	290	105
0753.00038.09	380	105

0753.03818.10

Round sink bowl

CODE	Ø	W/P
0753.03818.10	380	180
0753.04018.10	400	180

0753.01719.07

Rectangular Bowl

CODE	L	W	H
0753.01719.07	430	480	130

0754.106A0.11

Single Bowl Left Drainer Sink

CODE	BOWL DIMENSION				EXTERNAL DIMENSION	
	L	W	H		L	W
0754.106A0.11	400	400	250	A	1000	600
0754.126A0.11	400	400	250	A	1200	600
0754.146E0.11	500	400	250	E	1400	600
0754.107C0.11	500	500	300	C	1000	700
0754.127C0.11	500	500	300	C	1200	700
0754.147C0.11	500	500	300	C	1400	700
0754.147D0.11	600	500	300	D	1400	700

0754.106A0.15

Single Bowl Right Drainer Sink

CODE	BOWL DIMENSION				EXTERNAL DIMENSION	
	L	W	H		L	W
0754.106A0.15	400	400	250	A	1000	600
0754.126A0.15	400	400	250	A	1200	600
0754.146E0.15	500	400	250	E	1400	600
0754.107C0.15	500	500	300	C	1000	700
0754.127C0.15	500	500	300	C	1200	700
0754.147C0.15	500	500	300	C	1400	700
0754.147D0.15	600	500	300	D	1400	700

0754.126A0.13

Single Bowl Double Drainer Sink

CODE	BOWL DIMENSION				EXTERNAL DIMENSION	
	L	W	H		L	W
0754.126A0.13	400	400	250	A	1200	600
0754.146A0.13	400	400	250	A	1400	600
0754.166E0.13	400	400	250	A	1600	600
0754.147C0.13	500	500	300	C	1400	700
0754.167C0.13	500	500	300	C	1600	700

0754.166A0.23

EAC

Double Bowl Double Drainer Sink

CODE	BOWL DIMENSION				EXTERNAL DIMENSION	
	L	W	H		L	W
0754.166A0.23	400	400	250	A	1600	600
0754.186E0.23	500	400	250	E	1800	600
0754.196E0.23	500	400	250	E	1900	600
0754.246E0.23	500	400	250	E	2400	600
0754.187C0.23	500	500	300	C	1800	700
0754.197C0.23	500	500	300	C	1900	700
0754.207C0.23	500	500	300	C	2000	700
0754.247D0.23	600	500	300	D	2400	700

0754.146A0.25

EAC

Double bowl right drainer sink

CODE	BOWL DIMENSION				EXTERNAL DIMENSION	
	L	W	H		L	W
0754.146A0.25	400	400	250	A	1400	600
0754.156A0.25	400	400	250	A	1500	600
0754.166A0.25	400	400	250	A	1600	600
0754.166E0.25	500	400	250	E	1600	600
0754.186E0.25	500	400	250	E	1800	600
0754.196E0.25	500	400	250	E	1900	600
0754.157B0.25	500	400	250	E	1500	700
0754.167B0.25	400	500	250	B	1600	700
0754.167C0.25	400	500	300	B	1600	700
0754.187C0.25	500	500	300	C	1800	700
0754.197C0.25	500	500	300	C	1900	700
0754.197D0.25	600	500	300	D	1900	700
0754.207C0.25	500	500	300	C	2000	700
0754.217D0.25	600	500	300	D	2100	700

0754.146A0.21

EAC

Double bowl left drainer sink

CODE	BOWL DIMENSION				EXTERNAL DIMENSION	
	L	W	H		L	W
0754.146A0.21	400	400	250	A	1400	600
0754.156A0.21	400	400	250	A	1500	600
0754.166A0.21	500	400	250	E	1600	600
0754.166E0.21	500	500	250	E	1600	600
0754.186E0.21	400	500	250	B	1800	600
0754.196E0.21	400	500	250	B	1900	600
0754.157B0.21	400	500	250	B	1500	700
0754.167B0.21	400	500	250	B	1600	700
0754.167C0.21	400	500	300	B	1600	700
0754.187C0.21	400	500	300	B	1800	700
0754.197C0.21	400	500	300	B	1900	700
0754.197D0.21	500	500	300	C	1900	700
0754.217D0.21	500	500	300	C	2100	700

0754.216E0.31

Three bowls left drainer sink

CODE	BOWL DIMENSION				EXTERNAL DIMENSION	
	L	W	H		L	W
0754.216E0.31	500	400	250	E	2100	600

0754.247C0.33

Three bowls right drainer sink

CODE	BOWL DIMENSION				EXTERNAL DIMENSION	
	L	W	H		L	W
0754.247C0.33	500	500	300	C	2400	700

0754.196A0.41

Four bowls sink

CODE	BOWL DIMENSION				EXTERNAL DIMENSION	
	L	W/P	H		L	W
0754.196A0.41	400	400	250	A	1900	600

0754.056A0.01

Single Bow Sink

CODE	BOWL DIMENSION				EXTERNAL DIMENSION	
	L	W	H		L	W
0754.056A0.01	400	400	250	A	500	600
0754.066A0.01	400	400	250	A	600	600
0754.066E0.01	500	400	250	E	600	600
0754.076E0.01	500	500	250	E	700	600
0754.057B0.01	400	500	250	B	500	700
0754.067B0.01	400	500	250	B	600	700
0754.067C0.01	500	500	300	C	600	700
0754.077C0.01	500	500	300	C	700	700
0754.087D0.01	600	500	300	D	800	700

0754.126E0.27

Double Bowl Sink

CODE	BOWL DIMENSION				EXTERNAL DIMENSION	
	L	W	H		L	W
0754.126E0.27	500	400	250	E	1200	600
0754.146E0.27	500	400	250	E	1400	600
0754.127C0.27	500	500	300	C	1200	700
0754.147C0.27	500	500	300	C	1400	700
0754.147D0.27	600	500	300	D	1400	700

0754.166A0.35

Three Bowls Sink

CODE	BOWL DIMENSION				EXTERNAL DIMENSION	
	L	W	H		L	W
0754.166A0.35	400	400	250	A	1600	600
0754.186E0.35	500	400	250	E	1800	600
0754.196E0.35	500	400	250	E	1900	600
0754.187C0.35	500	500	300	C	1800	700
0754.197C0.35	500	500	300	C	1900	700

Single Bowl, Single Drainer Sink Unit With Fascia

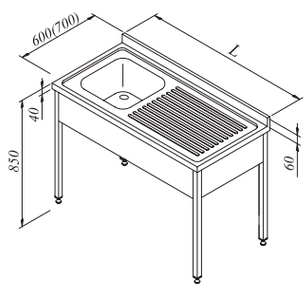

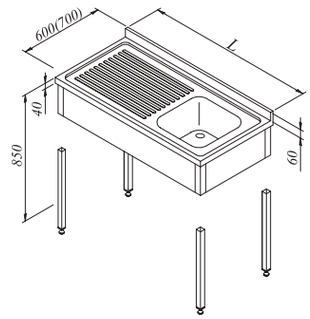

LEFT SINGLE DRAINER CODE		RIGHT SINGLE DRAINER CODE		BOWL DIMENSION				EXTERNAL DIMENSION			VOLUME (m³)	
MOUNTED	DEMOUNTED	MOUNTED	DEMOUNTED	L	W	H		L	W	H	MOUNTED	DEMOUNTED
7758.106A5.11	7754.106A5.15	7758.106A5.11	7754.106A5.15	400	400	250	A	1000	600	850	0.61	0.23
7758.126A5.11	7754.126A5.15	7758.126A5.11	7754.126A5.15	400	400	250	A	1200	600	850	0.73	0.28
7758.146E5.11	7754.146E5.15	7758.146E5.11	7754.146E5.15	500	400	250	E	1400	600	850	0.85	0.32
7758.107C5.11	7754.107C5.15	7758.107C5.11	7754.107C5.15	500	500	300	C	1000	700	850	0.71	0.27
7758.127C5.11	7754.127C5.15	7758.127C5.11	7754.127C5.15	500	500	300	C	1200	700	850	0.84	0.35
7758.147C5.11	7754.147C5.15	7758.147C5.11	7754.147C5.15	500	500	300	C	1400	700	850	0.98	0.41
7758.147D5.11	7754.147D5.15	7758.147D5.11	7754.147D5.15	600	500	300	D	1400	700	850	0.98	0.41

Single Bowl, Single Drainer Sink Unit With Under Shelf And Fascia

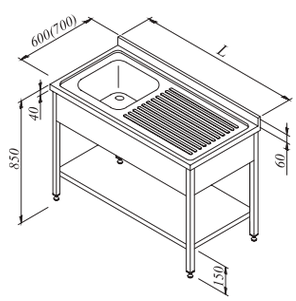

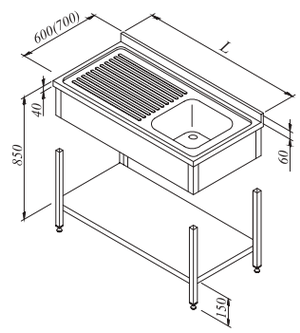

LEFT SINGLE DRAINER CODE		RIGHT SINGLE DRAINER CODE		BOWL DIMENSION				EXTERNAL DIMENSION			VOLUME (m³)	
MOUNTED	DEMOUNTED	MOUNTED	DEMOUNTED	L	W	H		L	W	H	MOUNTED	DEMOUNTED
7758.106A8.11	7754.106A8.11	7758.106A8.15	7754.106A8.15	400	400	250	A	1000	600	850	0.61	0.23
7758.126A8.11	7754.126A8.11	7758.126A8.15	7754.126A8.15	400	400	250	A	1200	600	850	0.73	0.28
7758.146E8.11	7754.146E8.11	7758.146E8.15	7754.146E8.15	500	400	250	E	1400	600	850	0.85	0.32
7758.107C8.11	7754.107C8.11	7758.107C8.15	7754.107C8.15	500	500	300	C	1000	700	850	0.71	0.27
7758.127C8.11	7754.127C8.11	7758.127C8.15	7754.127C8.15	500	500	300	C	1200	700	850	0.84	0.35
7758.147C8.11	7754.147C8.11	7758.147C8.15	7754.147C8.15	500	500	300	C	1400	700	850	0.98	0.41
7758.147D8.11	7754.147D8.11	7758.147D8.15	7754.147D8.15	600	500	300	D	1400	700	850	0.98	0.41

Double Bowl, Single Drainer Sink Unit With Fascia

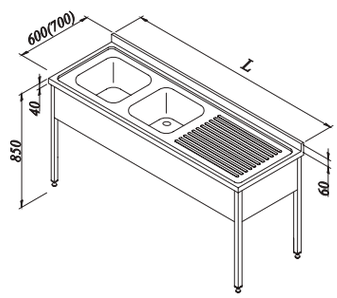

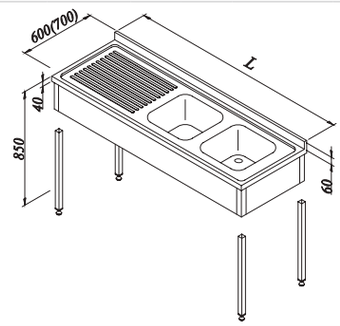

LEFT SINGLE DRAINER CODE		RIGHT SINGLE DRAINER CODE		BOWL DIMENSION				EXTERNAL DIMENSION			VOLUME (m³)	
MOUNTED	DEMOUNTED	MOUNTED	DEMOUNTED	L	W	H		L	W	H	MOUNTED	DEMOUNTED
7758.146A5.21	7754.146A5.21	7758.146A5.25	7754.146A5.25	400	400	250	A	1400	600	850	0.85	0.32
7758.156A5.21	7754.156A5.21	7758.156A5.25	7754.156A5.25	400	400	250	A	1500	600	850	0.91	0.35
7758.166A5.21	7754.166A5.21	7758.166A5.25	7754.166A5.25	400	400	250	A	1600	600	850	0.96	0.37
7758.166E5.21	7754.166E5.21	7758.166E5.25	7754.166E5.25	500	400	250	E	1600	600	850	0.96	0.37
7758.186E5.21	7754.186E5.21	7758.186E5.25	7754.186E5.25	500	400	250	E	1800	600	850	1.08	0.42
7758.196E5.21	7754.196E5.21	7758.196E5.25	7754.196E5.25	500	400	250	E	1900	600	850	1.14	0.44
7758.157B5.21	7754.157B5.21	7758.157B5.25	7754.157B5.25	400	500	250	B	1500	700	850	1.05	0.40
7758.167B5.21	7754.167B5.21	7758.167B5.25	7754.167B5.25	400	500	250	B	1600	700	850	1.12	0.46
7758.167C5.21	7754.167C5.21	7758.167C5.25	7754.167C5.25	500	500	300	C	1600	700	850	1.12	0.46
7758.187C5.21	7754.187C5.21	7758.187C5.25	7754.187C5.25	500	500	300	C	1800	700	850	1.25	0.52
7758.197C5.21	7754.197C5.21	7758.197C5.25	7754.197C5.25	500	500	300	C	1900	700	850	1.32	0.55
7758.197D5.21	7754.197D5.21	7758.197D5.25	7754.197D5.25	600	500	300	D	1900	700	850	1.32	0.55
7758.207C5.21	7754.207C5.21	7758.207C5.25	7754.207C5.25	500	500	300	C	2000	700	850	1.39	0.58
7758.217D5.21	7754.217D5.21	7758.217D5.25	7758.217D5.25	500	500	300	D	2100	700	850	1.46	0.61

Double Bowl, Single Drainer Sink Unit With Under Shelf And Fascia

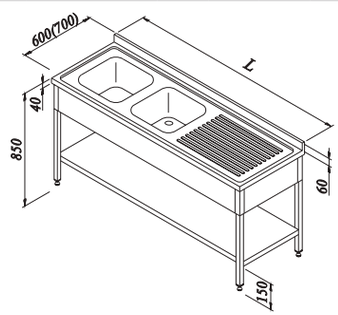

LEFT SINGLE DRAINER CODE		RIGHT SINGLE DRAINER CODE		BOWL DIMENSION				EXTERNAL DIMENSION			VOLUME (m³)	
MOUNTED	DEMOUNTED	MOUNTED	DEMOUNTED	L	W	H		L	W	H	MOUNTED	DEMOUNTED
7758.146A8.21	7754.146A8.21	7758.146A8.25	7754.146A8.25	400	400	250	A	1400	600	850	0.85	0.32
7758.156A8.21	7754.156A8.21	7758.156A8.25	7754.156A8.25	400	400	250	A	1500	600	850	0.91	0.35
7758.166A8.21	7754.166A8.21	7758.166A8.25	7754.166A8.25	400	400	250	A	1600	600	850	0.96	0.37
7758.166E8.21	7754.166E8.21	7758.166E8.25	7754.166E8.25	500	400	250	E	1600	600	850	0.96	0.37
7758.186E8.21	7754.186E8.21	7758.186E8.25	7754.186E8.25	500	400	250	E	1800	600	850	1.08	0.42
7758.196E8.21	7754.196E8.21	7758.196E8.25	7754.196E8.25	500	400	250	E	1900	600	850	1.14	0.44
7758.157B8.21	7754.157B8.21	7758.157B8.25	7754.157B8.25	400	500	250	B	1500	700	850	1.05	0.40
7758.167B8.21	7754.167B8.21	7758.167B8.25	7754.167B8.25	400	500	250	B	1600	700	850	1.12	0.46
7758.167C8.21	7754.167C8.21	7758.167C8.25	7754.167C8.25	500	500	300	C	1600	700	850	1.12	0.46
7758.187C8.21	7754.187C8.21	7758.187C8.25	7754.187C8.25	500	500	300	C	1800	700	850	1.25	0.52
7758.197C8.21	7754.197C8.21	7758.197C8.25	7754.197C8.25	500	500	300	C	1900	700	850	1.32	0.55
7758.197D8.21	7754.197D8.21	7758.197D8.25	7754.197D8.25	600	500	300	D	1900	700	850	1.32	0.55
7758.207C8.21	7754.207C8.21	7758.207C8.25	7754.207C8.25	500	500	300	C	2000	700	850	1.39	0.58
7758.217D8.21	7754.217D8.21	7758.217D8.25	7754.217D8.25	500	500	300	D	2100	700	850	1.46	0.61

Single Bowl, Double Drainer Sink Unit With Fascia

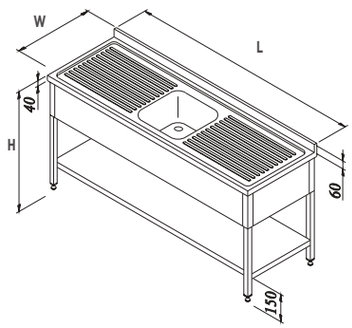

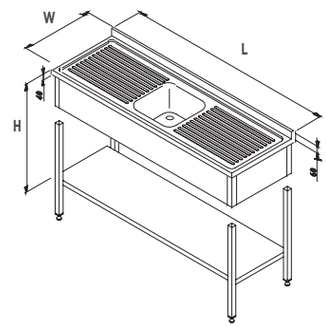

CODE		LEGS	BOWL DIMENSION				EXTERNAL DIMENSION			VOLUME (m³)	
MOUNTED	DEMOUNTED		L	W	H		L	W	H	MOUNTED	DEMOUNTED
7758.126A8.13	7754.126A8.13	4	400	400	250	A	1200	600	850	0.73	0.37
7758.146A8.13	7754.146A8.13	4	400	400	250	A	1400	600	850	0.85	0.42
7758.166A8.13	7754.166A8.13	4	400	400	250	A	1600	600	850	0.96	0.44
7758.147C8.13	7754.147C8.13	6	500	500	300	C	1400	700	850	0.98	0.48
7758.167C8.13	7754.167C8.13	6	500	500	300	C	1600	700	850	1.12	0.52

Single Bowl, Double Drainer Sink Unit With Under Shelf And Fascia

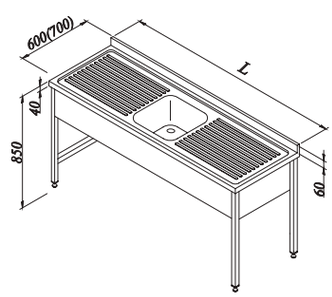

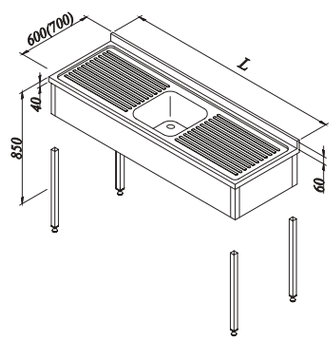

CODE		LEGS	BOWL DIMENSION				EXTERNAL DIMENSION			VOLUME (m³)	
MOUNTED	DEMOUNTED		L	W	H		L	W	H	MOUNTED	DEMOUNTED
7758.126A8.13	7754.126A5.13	4	400	400	250	A	1200	600	850	0.73	0.37
7758.146A8.13	7754.146A5.13	4	400	400	250	A	1400	600	850	0.85	0.42
7758.166A8.13	7754.166A5.13	4	400	400	250	A	1600	600	850	0.96	0.44
7758.147C8.13	7754.147C5.13	6	500	500	300	C	1400	700	850	0.98	0.48
7758.167C8.13	7754.167C5.13	6	500	500	300	C	1600	700	850	1.12	0.52

Double Bowl, Double Drainer Sink Unit With Fascia

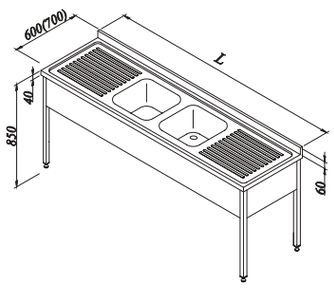

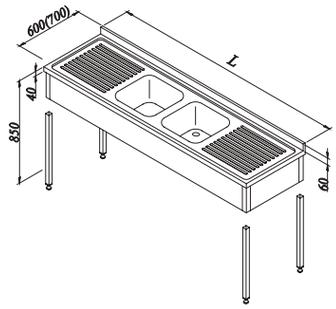

CODE		LEGS	BOWL DIMENSION				EXTERNAL DIMENSION			VOLUME (m³)	
MOUNTED	DEMOUNTED		L	W	H		L	W	H	MOUNTED	DEMOUNTED
7758.166A5.23	7754.166A5.23	4	400	400	250	A	1600	600	850	0.96	0.37
7758.186E5.23	7754.186E5.23	4	500	400	250	E	1800	600	850	1.08	0.42
7758.196E5.23	7754.196E5.23	4	500	400	250	E	1900	600	850	1.14	0.44
7758.216E5.23	7754.216E5.23	6	500	400	250	E	2100	600	850	1.24	0.48
7758.246E5.23	7754.246E5.23	6	500	400	250	E	2400	600	850	1.44	0.52
7758.187C5.23	7754.187C5.23	4	500	500	300	C	1800	700	850	1.25	0.52
7758.197C5.23	7754.197C5.23	4	500	500	300	C	1900	700	850	1.32	0.55
7758.207C5.23	7754.207C5.23	4	500	500	300	C	2100	700	850	1.39	0.58
7758.247D5.23	7754.247D5.23	6	600	500	300	D	2400	700	850	1.67	0.69

Double Bowl, Double Drainer Sink Unit With Under Shelf And Fascia

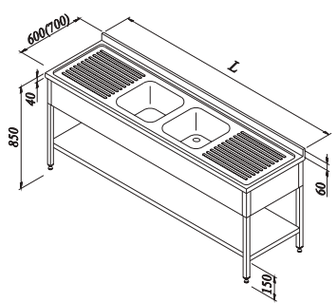

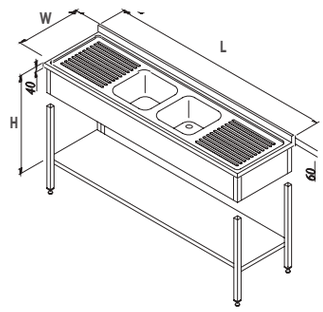

CODE		LEGS	BOWL DIMENSION				EXTERNAL DIMENSION			VOLUME (m³)	
MOUNTED	DEMOUNTED		L	W	H		L	W	H	MOUNTED	DEMOUNTED
7758.166A8.23	7754.166A8.23	4	400	400	250	A	1600	600	850	0.96	0.37
7758.186E8.23	7754.186E8.23	4	500	400	250	E	1800	600	850	1.08	0.42
7758.196E8.23	7754.196E8.23	4	500	400	250	E	1900	600	850	1.14	0.44
7758.216E8.23	7754.216E8.23	6	500	400	250	E	2100	600	850	1.24	0.48
7758.246E8.23	7754.246E8.23	6	500	400	250	E	2400	600	850	1.44	0.52
7758.187C8.23	7754.187C8.23	4	500	500	300	C	1800	700	850	1.25	0.52
7758.197C8.23	7754.197C8.23	4	500	500	300	C	1900	700	850	1.32	0.55
7758.207C8.23	7754.207C8.23	4	500	500	300	C	2100	700	850	1.39	0.58
7758.247D8.23	7754.247D8.23	6	600	500	300	D	2400	700	850	1.67	0.69

Three Bowls, Single Drainer Sink Unit With Fascia

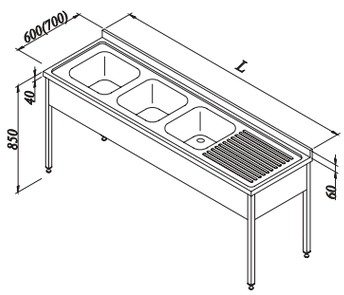

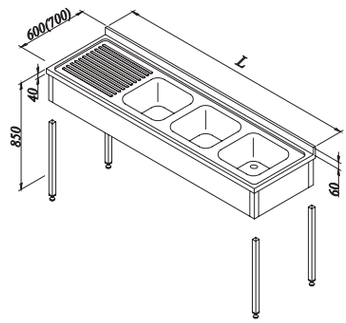

LEFT SINGLE DRAINER CODE		RIGHT SINGLE DRAINER CODE		BOWL DIMENSION				EXTERNAL DIMENSION			VOLUME (m³)	
MOUNTED	DEMOUNTED	MOUNTED	DEMOUNTED	L	W	H		L	W	H	MOUNTED	DEMOUNTED
7758.196A5.31	7754.196A5.31	7758.196A5.33	7754.196A5.33	400	400	250	A	1900	600	850	1.14	0.44
7758.216E5.31	7754.216E5.31	7758.216E5.33	7754.216E5.33	500	400	250	E	2100	600	850	1.25	0.48
7758.246E5.31	7754.246E5.31	7758.246E5.33	7754.246E5.33	500	400	250	E	2400	600	850	1.44	0.55
7758.247C5.31	7754.247C5.31	7758.247C5.33	7754.247C5.33	500	500	300	C	2400	700	850	1.67	0.69

Three Bowls, Single Drainer Sink Unit With Under Shelf And Fascia

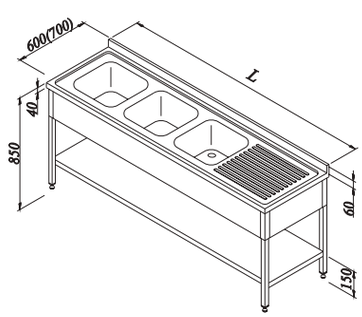

LEFT SINGLE DRAINER CODE		RIGHT SINGLE DRAINER CODE		BOWL DIMENSION				EXTERNAL DIMENSION			VOLUME (m³)	
MOUNTED	DEMOUNTED	MOUNTED	DEMOUNTED	L	W	H		L	W	H	MOUNTED	DEMOUNTED
7758.196A8.31	7754.196A8.31	7758.196A8.33	7754.196A8.33	400	400	250	A	1900	600	850	1.14	0.44
7758.216E8.31	7754.216E8.31	7758.216E8.33	7754.216E8.33	500	400	250	E	2100	600	850	1.25	0.48
7758.246E8.31	7754.246E8.31	7758.246E8.33	7754.246E8.33	500	400	250	E	2400	600	850	1.44	0.55
7758.247C8.31	7754.247C8.31	7758.247C8.33	7754.247C8.33	500	500	300	C	2400	700	850	1.67	0.69

Single Bowl Sink Unit With Fascia

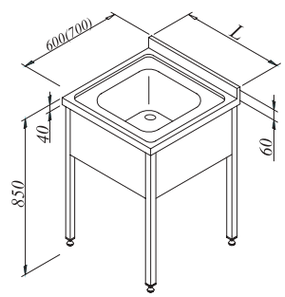

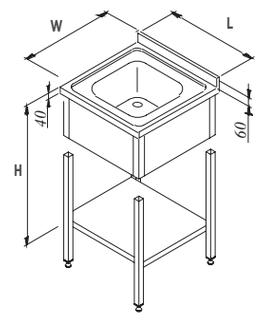

WITHOUT UNDER SHELF CODE		WITH UNDER SHELF CODE		BOWL DIMENSION				EXTERNAL DIMENSION			VOLUME (m³)	
MOUNTED	DEMOUNTED	MOUNTED	DEMOUNTED	L	W	H		L	W	H	MOUNTED	DEMOUNTED
7758.056A5.01	7754.056A5.01	7758.056A8.01	7754.056A8.01	400	400	250	A	500	600	850	0.31	0.12
7758.066A5.01	7754.066A5.01	7758.066A8.01	7754.066A8.01	400	400	250	A	600	600	850	0.37	0.14
7758.066E5.01	7754.066E5.01	7758.066E8.01	7754.066E8.01	500	400	250	E	600	600	850	0.37	0.14
7758.076E5.01	7754.076E5.01	7758.076E8.01	7754.076E8.01	500	400	250	E	700	600	850	0.43	0.18
7758.057B5.01	7754.057B5.01	7758.057B8.01	7754.057B8.01	400	500	250	B	500	700	850	0.36	0.14
7758.067B5.01	7754.067B5.01	7758.067B8.01	7754.067B8.01	400	500	250	B	600	700	850	0.43	0.18
7758.067C5.01	7754.067C5.01	7758.067C8.01	7754.067C8.01	500	500	300	C	600	700	850	0.43	0.18
7758.077C5.01	7754.077C5.01	7758.077C8.01	7754.077C8.01	500	500	300	C	700	700	850	0.5	0.21
7758.077D5.01	7754.077D5.01	7758.077D8.01	7754.077D8.01	600	500	300	D	700	700	850	0.5	0.21
7758.087D5.01	7754.087D5.01	7758.087D8.01	7754.087D8.01	600	500	300	D	800	700	850	0.57	0.24

Double bowl sink unit with Fascia

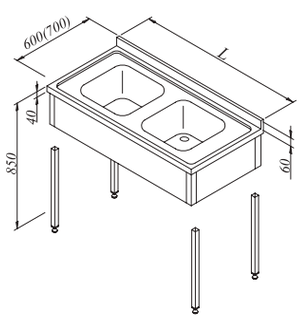

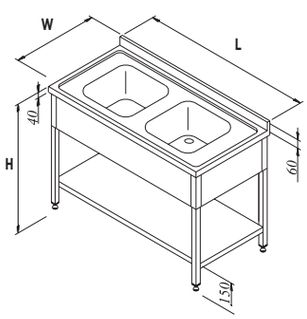

WITHOUT UNDER SHELF CODE		WITH UNDER SHELF CODE		BOWL DIMENSION				EXTERNAL DIMENSION			VOLUME (m³)	
MOUNTED	DEMOUNTED	MOUNTED	DEMOUNTED	L	W	H		L	W	H	MOUNTED	DEMOUNTED
7758.126E5.27	7754.126E5.27	7758.126E8.27	7754.126E8.27	500	400	250	E	1200	600	850	0.73	0.12
7758.146E5.27	7754.146E5.27	7758.146E8.27	7754.146E8.27	500	400	250	E	1400	600	850	0.85	0.14
7758.127C5.27	7754.127C5.27	7758.127C8.27	7754.127C8.27	500	500	300	C	1200	700	850	0.84	0.14
7758.147C5.27	7754.147C5.27	7758.147C8.27	7754.147C8.27	500	500	300	C	1400	700	850	0.98	0.18
7758.147D5.27	7754.147D5.27	7758.147D8.27	7754.147D8.27	600	500	300	D	1400	700	850	0.98	0.14

Double bowl sink unit with Fascia

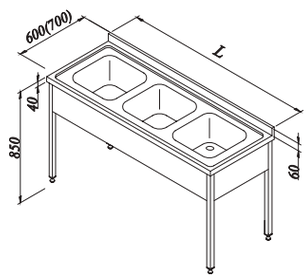

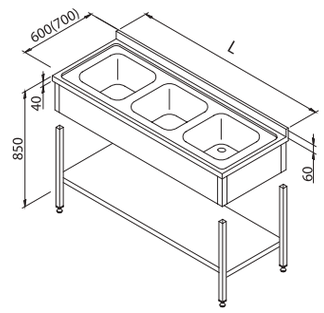

WITHOUT UNDER SHELF CODE		WITH UNDER SHELF CODE		BOWL DIMENSION				EXTERNAL DIMENSION			VOLUME (m³)	
MOUNTED	DEMOUNTED	MOUNTED	DEMOUNTED	L	W	H		L	W	H	MOUNTED	DEMOUNTED
7758.166A5.35	7754.166A5.35	7758.166A8.35	7754.166A8.35	500	400	250	A	1600	600	850	0.96	0.37
7758.186E5.35	7754.186E5.35	7758.186E8.35	7754.186E8.35	500	400	250	E	1800	600	850	1.08	0.42
7758.196E5.35	7754.196E5.35	7758.196E8.35	7754.196E8.35	500	500	300	E	1900	700	850	1.14	0.44
7758.187C5.35	7754.187C5.35	7758.187C8.35	7754.187C8.35	500	500	300	C	1800	700	850	1.25	0.52
7758.197C5.35	7754.197C5.35	7758.197C8.35	7754.197C8.35	600	500	300	C	1900	700	850	1.32	0.55

Four Bowls Sink Unit With Fascia

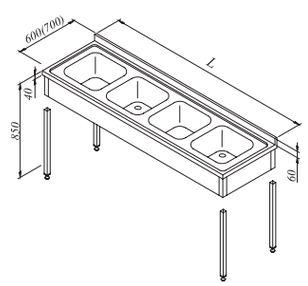

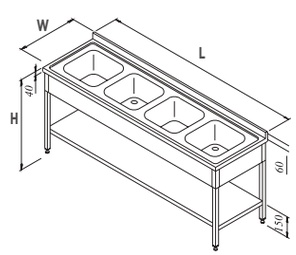

WITHOUT UNDER SHELF CODE		WITH UNDER SHELF CODE		BOWL DIMENSION				EXTERNAL DIMENSION			VOLUME (m³)	
MOUNTED	DEMOUNTED	MOUNTED	DEMOUNTED	L	W	H		L	W	H	MOUNTED	DEMOUNTED
7758.196A5.41	7754.196A5.41	7758.196A8.41	7754.196A8.41	400	400	250	A	1900	600	850	1.14	0.44
7758.216A5.41	7754.216A5.41	7758.216A8.41	7754.216A8.41	400	400	250	A	2100	600	850	1.25	0.48
7758.246E5.41	7754.246E5.41	7758.246E8.41	7754.246E8.41	500	400	250	E	2400	600	850	1.44	0.55

Single bowl, Single Drainer Sink Unit For Dishwashing Machine (Square Leg)

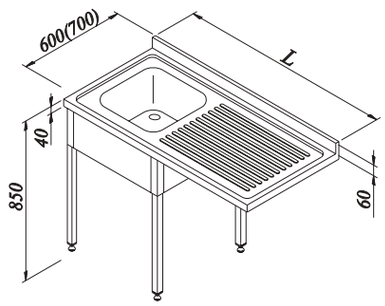

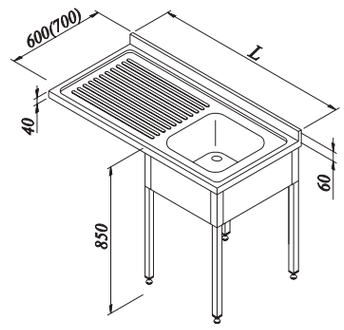

LEFT SINGLE DRAINER CODE		RIGHT SINGLE DRAINER CODE		BOWL DIMENSION				EXTERNAL DIMENSION			VOLUME (m³)	
MOUNTED	DEMOUNTED	MOUNTED	DEMOUNTED	L	W	H		L	W	H	MOUNTED	DEMOUNTED
7758.126AB.11	7754.126AB.11	7758.126AB.15	7754.126AB.15	400	400	250	A	1200	600	850	0.73	0.28
7758.146EB.11	7754.146EB.11	7758.146EB.15	7754.146EB.15	500	400	250	E	1400	600	850	0.85	0.32
7758.127CB.11	7754.127CB.11	7758.127CB.15	7754.127CB.15	500	500	300	C	1200	700	850	0.84	0.35
7758.147CB.11	7754.147CB.11	7758.147CB.15	7754.147CB.15	500	500	300	C	1400	700	850	0.98	0.41

7758.127CB.15 coded product are produced with demounted appearance.

Double Bowl, Single Drainer Sink Unit For Dishwashing Machine (Square Leg)

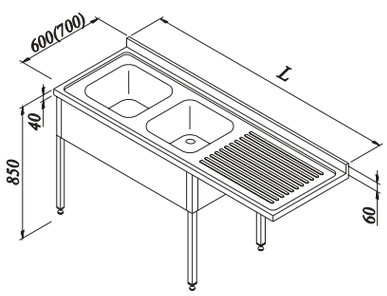

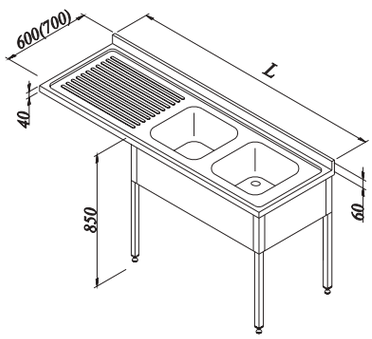

LEFT SINGLE DRAINER CODE		RIGHT SINGLE DRAINER CODE		BOWL DIMENSION				EXTERNAL DIMENSION			VOLUME (m³)	
MOUNTED	DEMOUNTED	MOUNTED	DEMOUNTED	L	W	H		L	W	H	MOUNTED	DEMOUNTED
7758.166AB.21	7754.166AB.21	7758.166AB.25	7754.166AB.25	400	400	250	A	1600	600	850	0.96	0.23
7758.186EB.21	7754.186EB.21	7758.186EB.25	7754.186EB.25	400	400	250	A	1800	600	850	1.08	0.28
7758.196EB.21	7754.196EB.21	7758.196EB.25	7754.196EB.25	500	400	250	E	1900	600	850	1.14	0.32
7758.187CB.21	7754.187CB.21	7758.187CB.25	7754.187CB.25	500	500	300	C	1800	700	850	1.25	0.27
7758.197CB.21	7754.197CB.21	7758.197CB.25	7754.197CB.25	500	500	300	C	1900	700	850	1.32	0.35
7758.207CB.21	7754.207CB.21	7758.207CB.25	7758.207CB.25	500	500	300	C	2000	700	850	1.39	0.41

7758.187CB.25 coded product are produced with demounted appearance.

Chef's Table With Sink

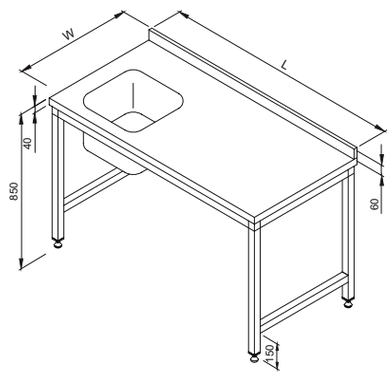

BOWL DIMENSION			CODE		EXTERNAL DIMENSION			VOLUME (m^3)
L	W	H	LEFT SINGLE BOWL	RIGHT SINGLE BOWL	L	W	H	
400	400	250	7745.106A2.15	7745.106A2.11	1200	600	850	0,34
400	400	250	7745.126A2.15	7745.126A2.11	1400	600	850	0,4
400	400	250	7745.146A2.15	7745.146A2.11	1600	600	850	0,48
400	400	250	7745.166A2.15	7745.166A2.11	1900	600	850	0,54
400	400	250	7745.196A2.15	7745.196A2.11	1000	600	850	0,65
400	400	250	7745.107A2.15	7745.107A2.11	1200	700	850	0,39
400	400	250	7745.127A2.15	7745.127A2.11	1400	700	850	0,47
400	400	250	7745.147A2.15	7745.147A2.11	1600	700	850	0,55
400	400	250	7745.167A2.15	7745.167A2.11	1900	700	850	0,62
400	400	250	7745.197A2.15	7745.197A2.11	700	700	850	0,74

Chef's Table With Sink and Under Shelf

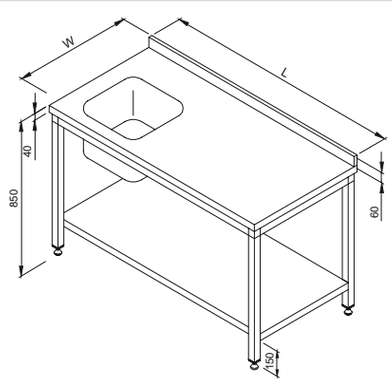

BOWL DIMENSION			CODE		EXTERNAL DIMENSION			VOLUME (m^3)
L	W	H	LEFT SINGLE BOWL	RIGHT SINGLE BOWL	L	W	H	
400	400	250	7745.106A3.15	7745.106A3.11	1200	600	850	0,34
400	400	250	7745.126A3.15	7745.126A3.11	1400	600	850	0,4
400	400	250	7745.146A3.15	7745.146A3.11	1600	600	850	0,48
400	400	250	7745.166A3.15	7745.166A3.11	1900	600	850	0,54
400	400	250	7745.196A3.15	7745.196A3.11	1000	600	850	0,65
400	400	250	7745.107A3.15	7745.107A3.11	1200	700	850	0,39
400	400	250	7745.127A3.15	7745.127A3.11	1400	700	850	0,47
400	400	250	7745.147A3.15	7745.147A3.11	1600	700	850	0,55
400	400	250	7745.167A3.15	7745.167A3.11	1900	700	850	0,62
400	400	250	7745.197A3.15	7745.197A3.11	700	700	850	0,74

Sink Unit, 1 Bowl, 1 Drainer, On Cupboard

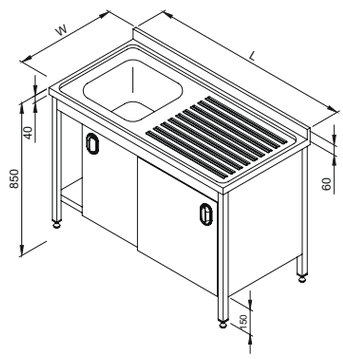

BOWL DIMENSION			CODE		EXTERNAL DIMENSION			VOLUME (m^3)
L	W	H	LEFT SINGLE BOWL	RIGHT SINGLE BOWL	L	W	H	
400	400	250	7758.106A3.15	7758.106A3.11	1000	600	850	0,61
500	500	300	7758.107C3.15	7758.107C3.11	1000	700	850	0,71
400	400	250	7758.126A3.15	7758.126A3.11	1200	600	850	0,73
500	500	300	7758.127C3.15	7758.127C3.11	1200	700	850	0,84
500	400	250	7758.146E3.15	7758.146E3.11	1400	600	850	0,85
500	500	300	7758.147C3.15	7758.147C3.11	1400	700	850	0,98

Sink Unit, 2 Bowls, 1 Drainer, On Cupboard

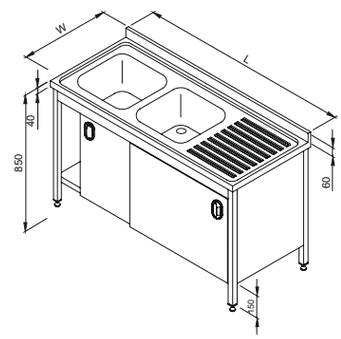

BOWL DIMENSION			CODE		EXTERNAL DIMENSION			VOLUME (m^3)
L	W	H	LEFT SINGLE BOWL	RIGHT SINGLE BOWL	L	W	H	
400	400	250	7758.146A3.21	7758.146A3.25	1400	600	850	0,85
500	400	250	7758.166E3.21	7758.166E3.25	1600	600	850	0,96
500	500	300	7758.167C3.21	7758.167C3.25	1600	700	850	1,12
500	400	250	7758.196E3.21	7758.196E3.25	1900	600	850	1,14
500	500	300	7758.197C3.21	7758.197C3.25	1900	700	850	1,32

Sink Unit, 1 Bowl, 2 Drainers, On Cupboard

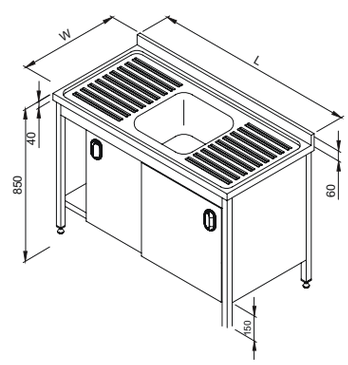

BOWL DIMENSION			CODE	EXTERNAL DIMENSION			VOLUME (m^3)
L	W	H		L	W	H	
400	400	250	7758.126A3.13	1200	600	850	0,73
400	400	250	7758.146A3.13	1400	600	850	0,85
500	500	300	7758.147C3.13	1400	700	850	0,98
400	400	250	7758.166A3.13	1600	600	850	0,96
500	500	300	7758.167C3.13	1600	700	850	1,12

Sink Unit, 1 Bowl, On Cupboard

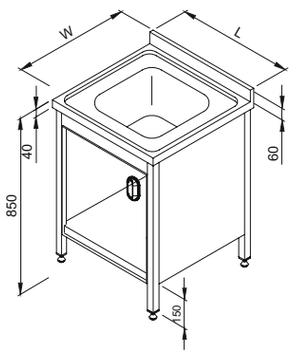

BOWL DIMENSION			CODE	EXTERNAL DIMENSION			VOLUME (m^3)
L	W	H		L	W	H	
400	400	250	7758.056A3.01	500	600	850	0,31
400	500	250	7758.057B3.01	500	700	850	0,36
400	400	250	7758.066A3.01	600	600	850	0,37
500	400	250	7758.066E3.01	600	600	850	0,37
400	500	250	7758.067B3.01	600	700	850	0,43
500	500	300	7758.067C3.01	600	700	850	0,43
500	400	250	7758.076E3.01	700	600	850	0,43
500	500	300	7758.077C3.01	700	700	850	0,5
600	500	300	7758.077D3.01	700	700	850	0,5
600	500	300	7758.087D3.01	800	700	850	0,57

Sink Unit, 3 Bowls, On Cupboard

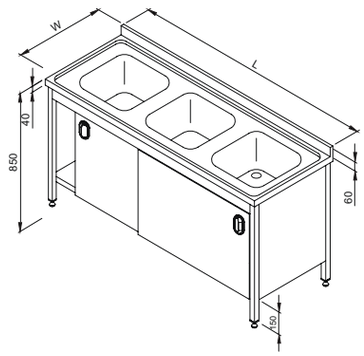

BOWL DIMENSION			CODE	EXTERNAL DIMENSION			VOLUME (m^3)
L	W	H		L	W	H	
400	400	250	7758.166A3.35	1600	600	850	0,96
500	400	250	7758.196E3.35	1900	600	850	1,14
500	500	300	7758.197C3.35	1900	700	850	1,32

Cocktail Preparation Bench

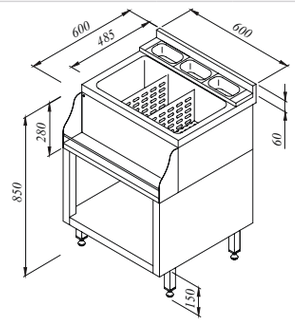

CODE	L	W	H
7579.06608.00	600	600	850
7579.04608.00	400	600	850

Bottle Display

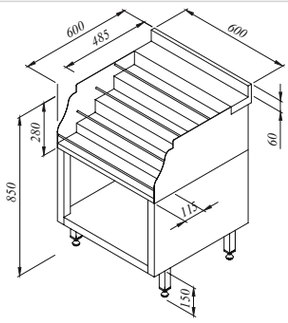

CODE	L	W	H
7899.06068.01	600	600	850
7899.04068.01	400	600	850

Bar Bench With Drainer

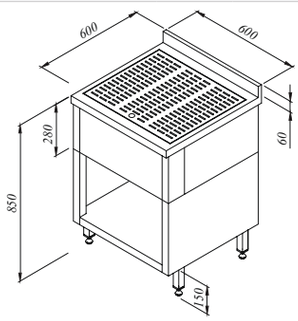

CODE	L	W	H
7911.06608.12	600	600	850
7911.04608.12	400	600	850

Bar Bench With Drainer And Bottle Display

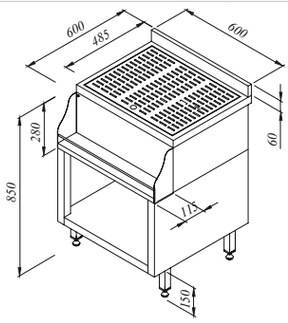

CODE	L	W	H
7911.04608.11	600	600	850
7911.06608.11	400	600	850

Blender Bench

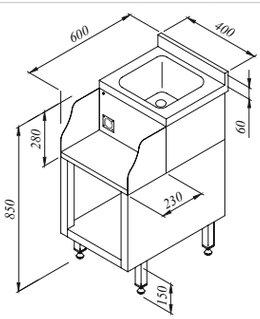

CODE	L	W	H
7758.04068.81	400	600	850

Blender Bench Counter Top

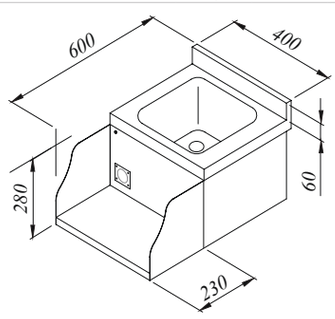

CODE	L	W	H
7758.04068.82	600	600	850

Cocktail Preparation Bench Counter Top

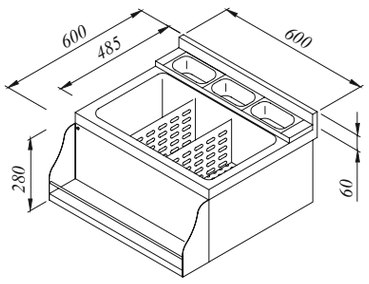

CODE	L	W	H
7579.06608.01	600	600	850
7579.04608.01	400	600	850

Bottle Display Counter Top

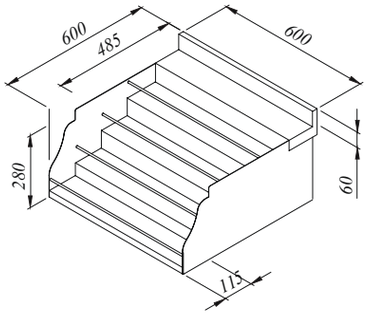

CODE	L	W	H
7899.06068.02	600	600	850
7899.04068.02	400	600	850

Bar Bench With Drainer & Bottle Display Counter Top

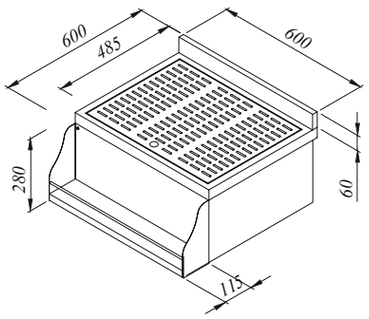

CODE	L	W	H
7911.04608.25	600	600	850
7911.06608.25	400	600	850

Bar Bench With Drainer Counter Top

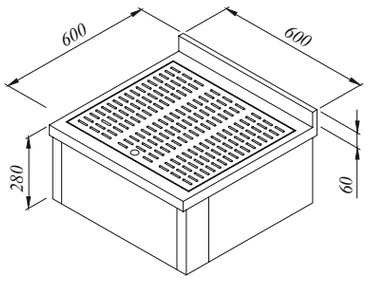

CODE	L	W	H
7911.04608.32	600	600	850
7911.06608.32	400	600	850

Refrigerated Cocktail Preparation Unit

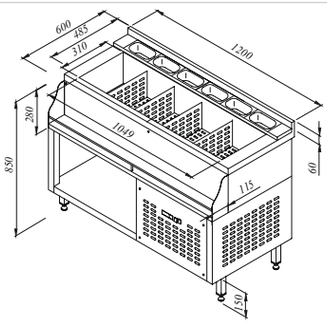

CODE	L	W	H
7579.06608.10	600	600	850
7579.08608.10	800	600	850
7579.12608.10	1200	600	850

Dishwasher outlet table

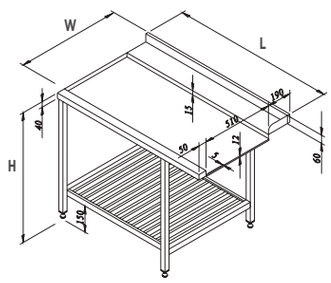

CODE	L	W	H	VOLUME (m^3)
7711.07075.12	700	750	850	0.54
7711.09075.12	900	750	850	0.67
7711.12075.12	1200	750	850	0.90
7711.14075.12	1400	750	850	1.05
7711.16075.12	1600	750	850	1.19
7711.19075.12	1900	750	850	1.40

Dishwasher outlet table

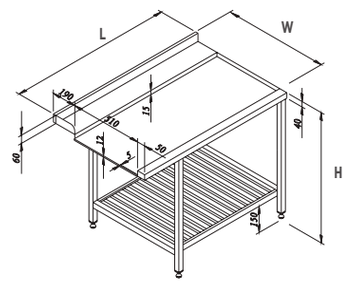

CODE	L	W	H	VOLUME (m^3)
7711.07075.13	700	750	850	0.54
7711.09075.13	900	750	850	0.67
7711.12075.13	1200	750	850	0.90
7711.14075.13	1400	750	850	1.05
7711.16075.13	1600	750	850	1.19
7711.19075.13	1900	750	850	1.40

Dishwasher Inlet Table

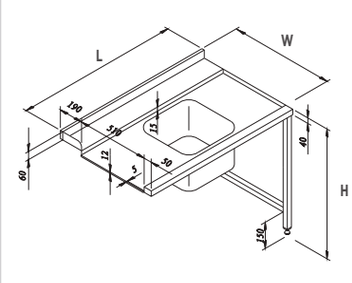

CODE	L	W	H	VOLUME (m^3)
7711.07075.21	700	750	850	0.54
7711.09075.21	900	750	850	0.67
7711.12075.21	1200	750	850	0.90
7711.14075.21	1400	750	850	1.05
7711.16075.21	1600	750	850	1.19
7711.19075.21	1900	750	850	1.40

Dishwasher inlet table

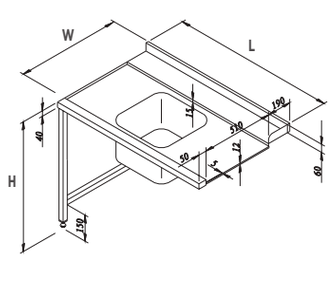

CODE	L	W	H	VOLUME (m^3)
7711.07075.22	700	750	850	0.54
7711.09075.22	900	750	850	0.67
7711.12075.22	1200	750	850	0.90
7711.14075.22	1400	750	850	1.05
7711.16075.22	1600	750	850	1.19
7711.19075.22	1900	750	850	1.40

Dishwasher Inlet Table With Under Shelf

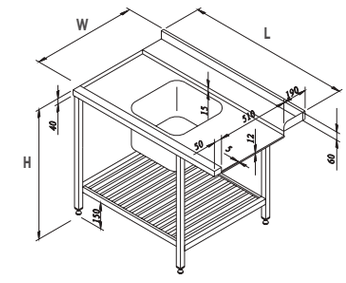

CODE	L	W	H	VOLUME (m^3)
7711.07075.23	700	750	850	0.54
7711.09075.23	900	750	850	0.67
7711.12075.23	1200	750	850	0.90
7711.14075.23	1400	750	850	1.05
7711.16075.23	1600	750	850	1.19
7711.19075.23	1900	750	850	1.40

Dishwasher Inlet Table With Under Shelf

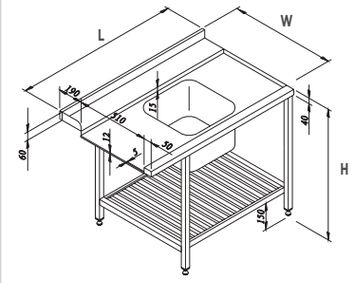

CODE	L	W	H	VOLUME (m^3)
7711.07075.24	700	750	850	0.54
7711.09075.24	900	750	850	0.67
7711.12075.24	1200	750	850	0.90
7711.14075.24	1400	750	850	1.05
7711.16075.24	1600	750	850	1.19
7711.19075.24	1900	750	850	1.40

Scrapping table with rack shelf

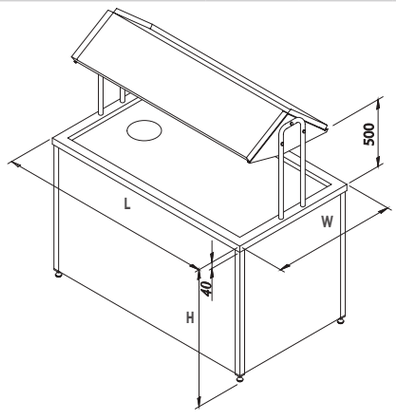

CODE	L	W	H	VOLUME (m^3)
7712.12090.01	1200	900	850	1.06
7712.14090.01	1400	900	850	1.24
7712.16090.01	1600	900	850	1.41
7712.19090.01	1900	900	850	1.66
7712.12011.01	1200	900	850	1.29
7712.14011.01	1400	900	850	1.50
7712.16011.01	1600	900	850	1.70
7712.19011.01	1900	900	850	2.01

Scrapping table without under shelf

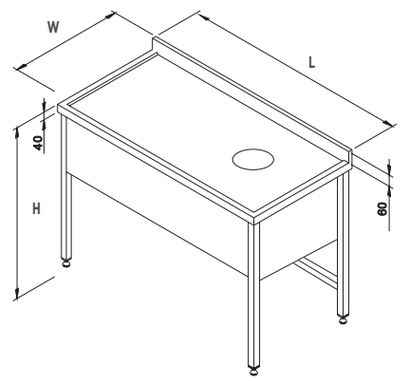

CODE	L	W	H	VOLUME (m^3)
7712.12060.03	1200	600	850	0.73
7712.14060.03	1400	600	850	0.84
7712.16060.03	1600	600	850	0.96
7712.19060.03	1900	600	850	1.14
7712.12070.03	1200	700	850	0.85
7712.14070.03	1400	700	850	0.97
7712.16070.03	1600	700	850	1.13
7712.19070.03	1900	700	850	1.32

Bench with strainer

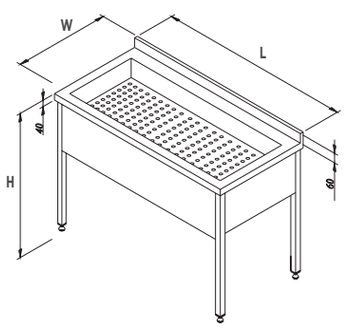

CODE	L	W	H	VOLUME (m^3)
7911.12060.19	1200	600	850	0.73
7911.14060.19	1400	600	850	0.84
7911.16060.19	1600	600	850	0.96
7911.19060.19	1900	600	850	1.14
7911.12070.19	1200	600	850	0.85
7911.14070.19	1400	600	850	0.97
7911.16070.19	1600	600	850	1.13
7911.19070.19	1900	600	850	1.32

Fish preparation table with double sink

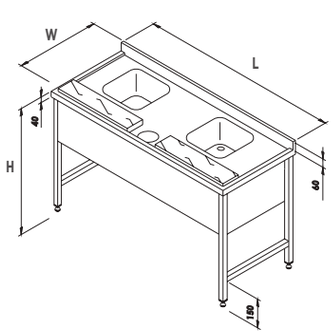

CODE	L	W	H	VOLUME (m^3)
7758.14070.08	1400	700	850	0.98
7758.16070.08	1600	700	850	1.11
7758.18070.08	1800	700	850	1.25
7758.19070.08	1900	700	850	1.32
7758.21070.08	2100	700	850	1.45
7758.24070.08	2400	700	850	1.65

Pot Washing Sink

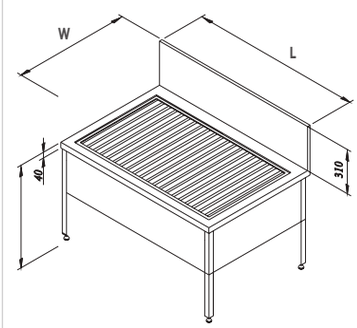

CODE	L	W	H	VOLUME (m^3)
7771.12080.00	1200	800	600	1.17
7771.14080.00	1400	800	600	1.35
7771.16080.00	1600	800	600	1.54
7771.19080.00	1900	800	600	1.82

Demounted Working Bench

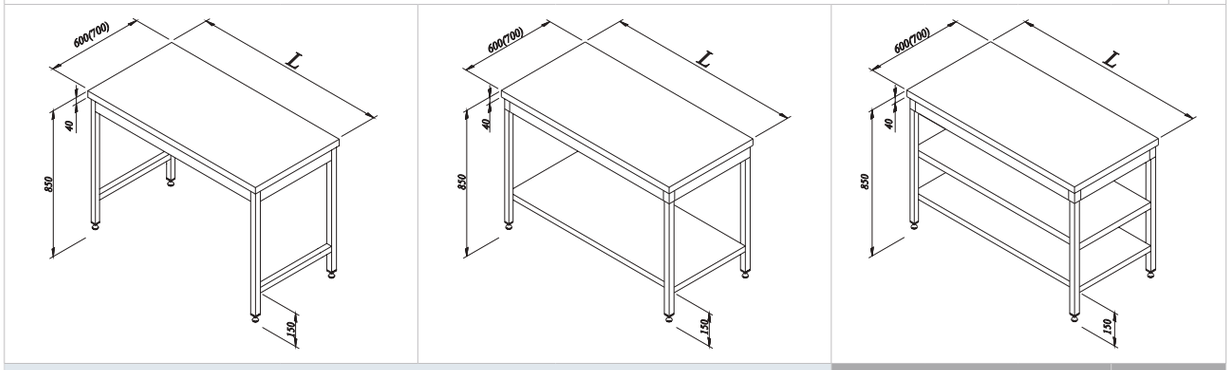

CODE			DIMENSIONS			VOLUME (m³)
WITHOUT SHELF	WITH SHELF	WITH DOUBLE SHELF	L	W	H	
7911.06060.84	7911.06060.85	7911.06060.79	600	600	850	0.08
7911.09060.84	7911.09060.85	7911.09060.79	900	600	850	0.12
7911.10060.84	7911.10060.85	7911.10060.79	1000	600	850	0.14
7911.12060.84	7911.12060.85	7911.12060.79	1200	600	850	0.16
7911.14060.84	7911.14060.85	7911.14060.79	1400	600	850	0.19
7911.16060.84	7911.16060.85	7911.16060.79	1600	600	850	0.21
7911.19060.84	7911.19060.85	7911.19060.79	1900	600	850	0.25
7911.06070.84	7911.06070.85	7911.06070.79	600	700	850	0.08
7911.09070.84	7911.09070.85	7911.09070.79	900	700	850	0.11
7911.10070.84	7911.10070.85	7911.10070.79	1000	700	850	0.15
7911.12070.84	7911.12070.85	7911.12070.79	1200	700	850	0.16
7911.14070.84	7911.14070.85	7911.14070.79	1400	700	850	0.22
7911.16070.84	7911.16070.85	7911.16070.79	1600	700	850	0.25
7911.19070.84	7911.19070.85	7911.19070.79	1900	700	850	0.29

Demounted Working Bench With Splashback

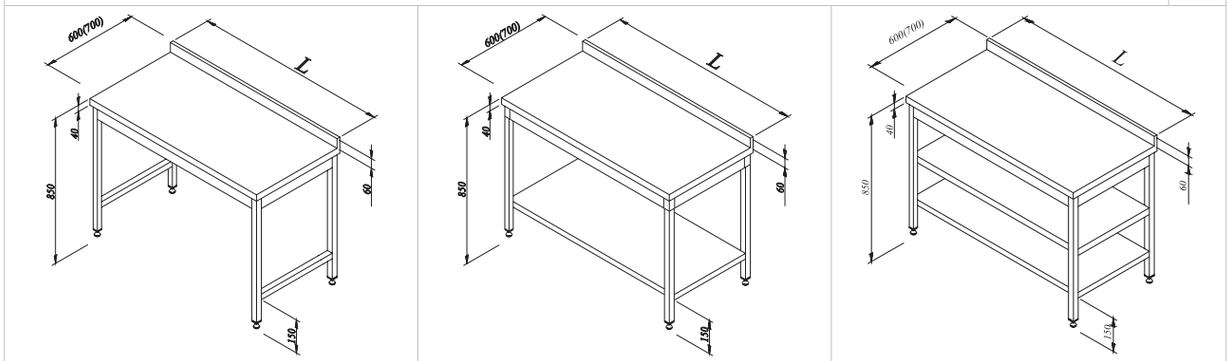

CODE			DIMENSIONS			VOLUME (m³)
WITHOUT SHELF	WITH SHELF	WITH DOUBLE SHELF	L	W	H	
7911.06060.83	7911.06060.81	7911.06060.82	600	600	850	0.08
7911.09060.83	7911.09060.81	7911.09060.82	900	600	850	0.12
7911.10060.83	7911.10060.81	7911.10060.82	1000	600	850	0.14
7911.12060.83	7911.12060.81	7911.12060.82	1200	600	850	0.16
7911.14060.83	7911.14060.81	7911.14060.82	1400	600	850	0.19
7911.16060.83	7911.16060.81	7911.16060.82	1600	600	850	0.21
7911.19060.83	7911.19060.81	7911.19060.82	1900	600	850	0.25
7911.06070.83	7911.06070.81	7911.06070.82	600	700	850	0.08
7911.09070.83	7911.09070.81	7911.09070.82	900	700	850	0.11
7911.10070.83	7911.10070.81	7911.10070.82	1000	700	850	0.15
7911.12070.83	7911.12070.81	7911.12070.82	1200	700	850	0.16
7911.14070.83	7911.14070.81	7911.14070.82	1400	700	850	0.22
7911.16070.83	7911.16070.81	7911.16070.82	1600	700	850	0.25
7911.19070.83	7911.19070.81	7911.19070.82	1900	700	850	0.29

Working Bench With Drawer and Splashback

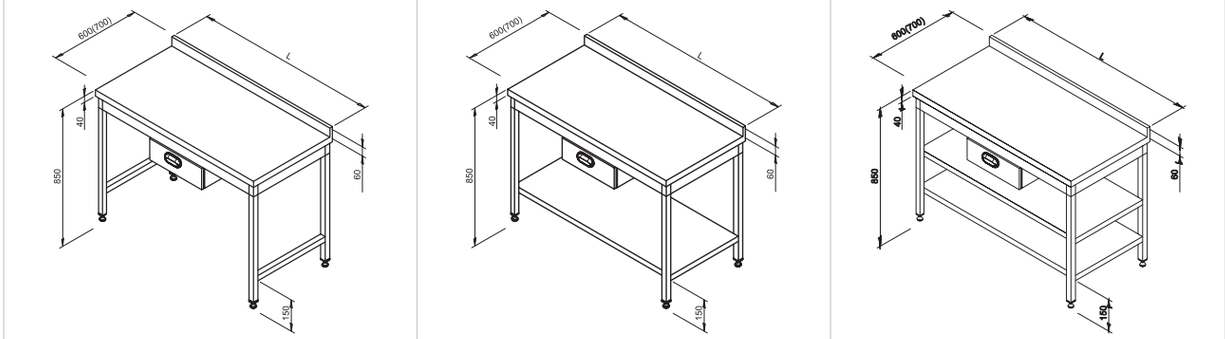

CODE			DIMENSIONS			VOLUME (m³)
WITHOUT SHELF	WITH SHELF	WITH DOUBLE SHELF	L	W	H	
7911.12060.20	7911.12060.28	7911.12060.24	1200	600	850	0.73
7911.14060.20	7911.14060.28	7911.14060.24	1400	600	850	0.84
7911.16060.20	7911.16060.28	7911.16060.24	1600	600	850	0.96
7911.19060.20	7911.19060.28	7911.19060.24	1900	600	850	1.14
7911.12070.20	7911.12070.28	7911.12070.24	1200	700	850	0.85
7911.14070.20	7911.14070.28	7911.14070.24	1400	700	850	0.97
7911.16070.20	7911.16070.28	7911.16070.24	1600	700	850	1.13
7911.19070.20	7911.19070.28	7911.19070.24	1900	700	850	1.32

Working Bench With Group Drawers and Splashback

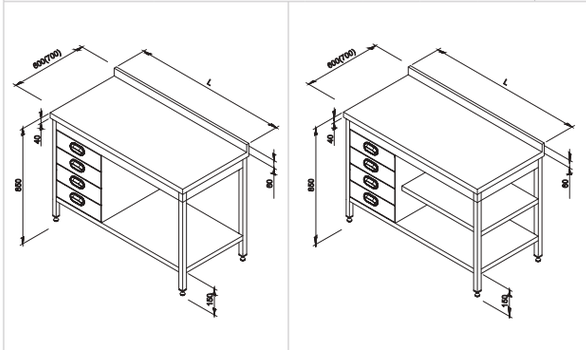

CODE		DIMENSIONS			VOLUME (m³)
WITH SHELF	WITH DOUBLE SHELF	L	W	H	
7911.12060.48	7911.12060.44	1200	600	850	0.73
7911.14060.48	7911.14060.44	1400	600	850	0.84
7911.16060.48	7911.16060.44	1600	600	850	0.96
7911.19060.48	7911.19060.44	1900	600	850	1.14
7911.12070.48	7911.12070.44	1200	700	850	0.85
7911.14070.48	7911.14070.44	1400	700	850	0.97
7911.16070.48	7911.16070.44	1600	700	850	1.13
7911.19070.48	7911.19070.44	1900	700	850	1.32

Working Bench With Cupboard And Splashback

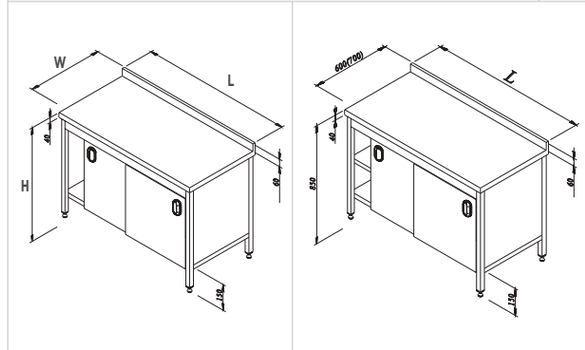

CODE		DIMENSIONS			VOLUME (m³)
WITH SHELF	WITH DOUBLE SHELF	L	W	H	
7911.12060.12	7911.12060.13	1200	600	850	0.73
7911.14060.12	7911.14060.13	1400	600	850	0.84
7911.16060.12	7911.16060.13	1600	600	850	0.96
7911.19060.12	7911.19060.13	1900	600	850	1.14
7911.12070.12	7911.12070.13	1200	700	850	0.85
7911.14070.12	7911.14070.13	1400	700	850	0.97
7911.16070.12	7911.16070.13	1600	700	850	1.13
7911.19070.12	7911.19070.13	1900	700	850	1.32

Working Bench with Group Drawers and Cupboard, Splashback

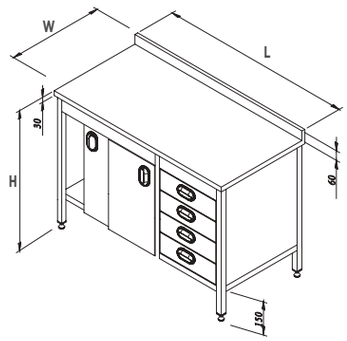

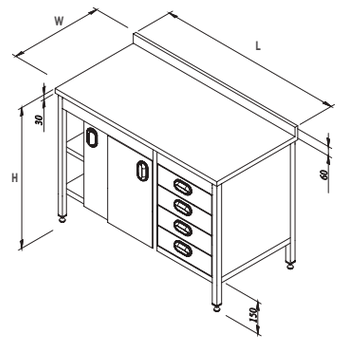

CODE		DIMENSIONS			VOLUME (m³)
WITH SHELF	WITH DOUBLE SHELF	L	W	H	
7911.12060.52	7911.12060.56	1200	600	850	0.73
7911.14060.52	7911.14060.56	1400	600	850	0.84
7911.16060.52	7911.16060.56	1600	600	850	0.96
7911.19060.52	7911.19060.56	1900	600	850	1.14
7911.12070.52	7911.12070.56	1200	700	850	0.85
7911.14070.52	7911.14070.56	1400	700	850	0.97
7911.16070.52	7911.16070.56	1600	700	850	1.13
7911.19070.52	7911.19070.56	1900	700	850	1.32

Mobile Bench and Splashback

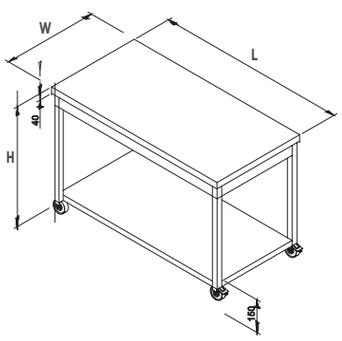

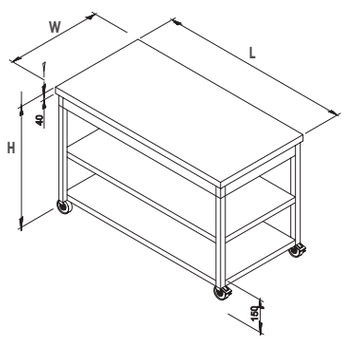

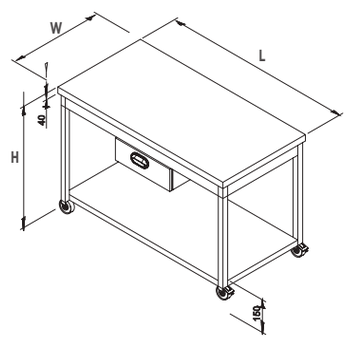

CODE			DIMENSIONS			VOLUME (m³)
WITH SHELF	WITH DOUBLE SHELF	WITH SHELF AND DRAWER	L	W	H	
7911.12060.15	7911.12060.14	7911.12060.35	1200	600	850	0.73
7911.14060.15	7911.14060.14	7911.14060.35	1400	600	850	0.84
7911.16060.15	7911.16060.14	7911.16060.35	1600	600	850	0.96
7911.19060.15	7911.19060.14	7911.19060.35	1900	600	850	1.14
7911.12070.15	7911.12070.14	7911.12070.35	1200	700	850	0.85
7911.14070.15	7911.14070.14	7911.14070.35	1400	700	850	0.97
7911.16070.15	7911.16070.14	7911.16070.35	1600	700	850	1.13
7911.19070.15	7911.19070.14	7911.19070.35	1900	700	850	1.32

Working Bench With Marble and Splashback

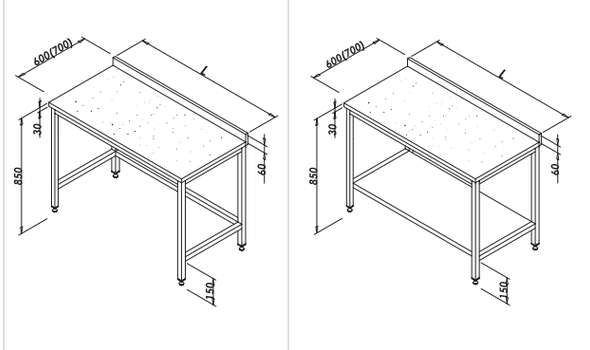

CODE		DIMENSIONS			VOLUME (m³)
WITH SHELF	WITH DOUBLE SHELF	L	W	H	
7911.12070.22M	7911.12070.30M	1200	700	850	0.85
7911.14070.22M	7911.14070.30M	1400	700	850	0.97
7911.16070.22M	7911.16070.30M	1600	700	850	1.13
7911.19070.22M	7911.19070.30M	1900	700	850	1.32
7911.12080.22M	7911.12080.30M	1200	800	850	0.95
7911.14080.22M	7911.14080.30M	1400	800	850	1.10
7911.16080.22M	7911.16080.30M	1600	800	850	1.26
7911.19080.22M	7911.19080.30M	1900	800	850	1.50

Working Bench With Marble, Drawer and Splashback

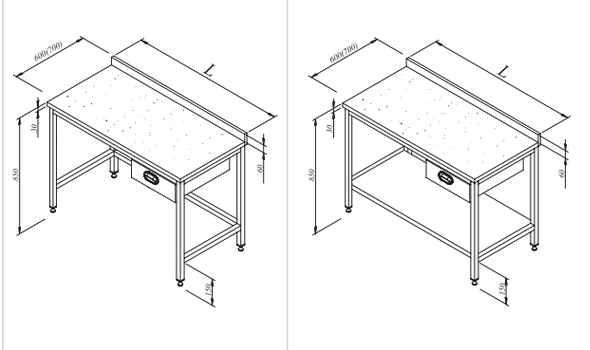

CODE		DIMENSIONS			VOLUME (m³)
WITH SHELF	WITH DOUBLE SHELF	L	W	H	
7911.12070.22	7911.12070.30	1200	700	850	0.85
7911.14070.22	7911.14070.30	1400	700	850	0.97
7911.16070.22	7911.16070.30	1600	700	850	1.13
7911.19070.22	7911.19070.30	1900	700	850	1.32
7911.12080.22	7911.12080.30	1200	800	850	0.95
7911.14080.22	7911.14080.30	1400	800	850	1.10
7911.16080.22	7911.16080.30	1600	800	850	1.26
7911.19080.22	7911.19080.30	1900	800	850	1.50

Working Bench With Wooden top and Splashback

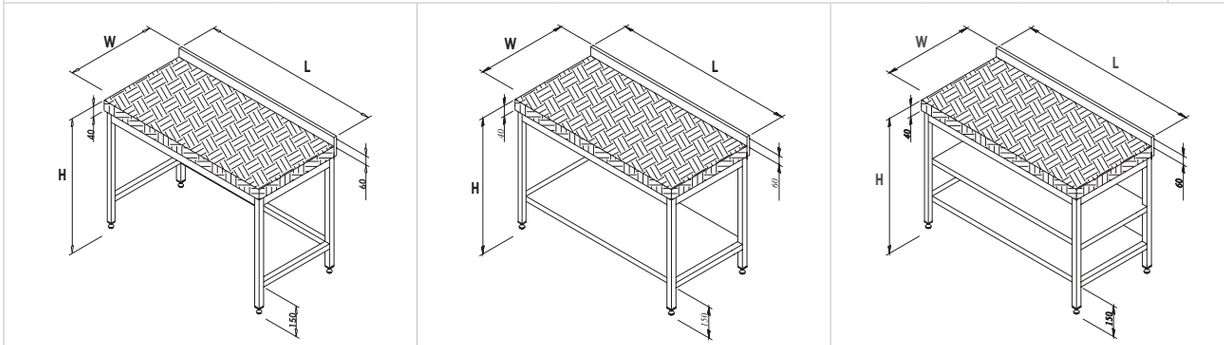

CODE			DIMENSIONS			VOLUME (m³)
WITHOUT SHELF	WITH SHELF	WITH DOUBLE SHELF	L	W	H	
7911.12060.21A	7911.12060.09	7911.12060.04A	1200	600	850	0.73
7911.14060.21A	7911.14060.09	7911.14060.04A	1400	600	850	0.84
7911.16060.21A	7911.16060.09	7911.16060.04A	1600	600	850	0.96
7911.19060.21A	7911.19060.09	7911.19060.04A	1900	600	850	1.14
7911.12070.21A	7911.12070.09	7911.12070.04A	1200	700	850	0.85
7911.14070.21A	7911.14070.09	7911.14070.04A	1400	700	850	0.97
7911.16070.21A	7911.16070.09	7911.16070.04A	1600	700	850	1.13
7911.19070.21A	7911.19070.09	7911.19070.04A	1900	700	850	1.32

Working Bench With Wooden Top, Drawer and Splashback

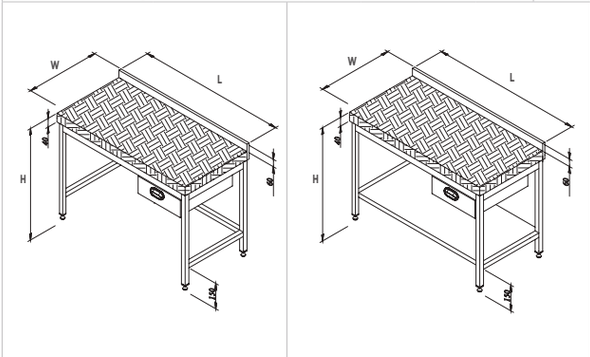

CODE		DIMENSIONS			VOLUME (m³)
WITHOUT SHELF	WITH SHELF	L	W	H	
7911.12060.21	7911.12060.29	1200	700	850	0.85
7911.14060.21	7911.14060.29	1400	700	850	0.97
7911.16060.21	7911.16060.29	1600	700	850	1.13
7911.19060.21	7911.19060.29	1900	700	850	1.32
7911.12070.21	7911.12070.29	1200	800	850	0.95
7911.14070.21	7911.14070.29	1400	800	850	1.10
7911.16070.21	7911.16070.29	1600	800	850	1.26
7911.19070.21	7911.19070.29	1900	800	850	1.50

Working Bench With Polyethylen Top and Splashback

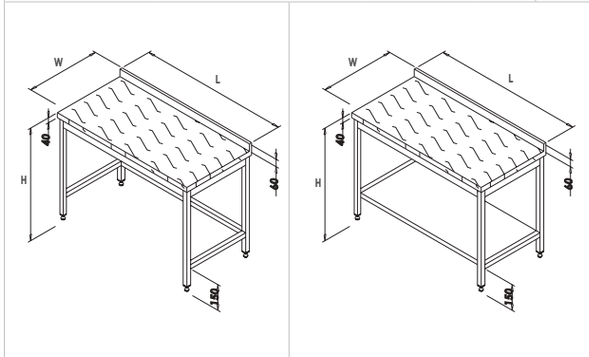

CODE		DIMENSIONS			VOLUME (m³)
WITHOUT SHELF	WITH SHELF	L	W	H	
7911.12060.23P	7911.12060.31P	1200	700	850	0.85
7911.14060.23P	7911.14060.31P	1400	700	850	0.97
7911.16060.23P	7911.16060.31P	1600	700	850	1.13
7911.19060.23P	7911.19060.31P	1900	700	850	1.32
7911.12070.23P	7911.12070.31P	1200	800	850	0.95
7911.14070.23P	7911.14070.31P	1400	800	850	1.10
7911.16070.23P	7911.16070.31P	1600	800	850	1.26
7911.19070.23P	7911.19070.31P	1900	800	850	1.50

Working Bench With Polyethylen Top, Drawer and Splashback

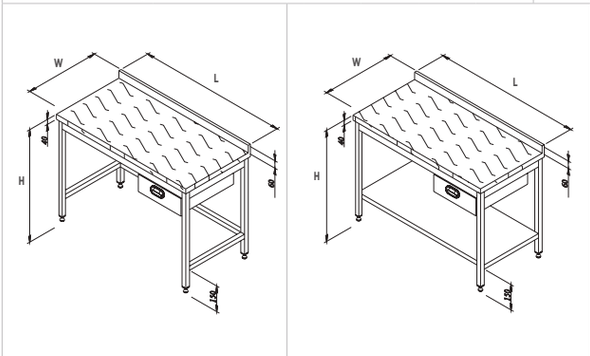

CODE		DIMENSIONS			VOLUME (m³)
WITHOUT SHELF	WITH SHELF	L	W	H	
7911.12060.23	7911.12060.31	1200	700	850	0.85
7911.14060.23	7911.14060.31	1400	700	850	0.97
7911.16060.23	7911.16060.31	1600	700	850	1.13
7911.19060.23	7911.19060.31	1900	700	850	1.32
7911.12070.23	7911.12070.31	1200	800	850	0.95
7911.14070.23	7911.14070.31	1400	800	850	1.10
7911.16070.23	7911.16070.31	1600	800	850	1.26
7911.19070.23	7911.19070.31	1900	800	850	1.50

Meat block

CODE		DIMENSIONS			VOLUME (m³)
WOODEN TOP	POLYETHYLEN TOP	L	W	H	
7911.05050.90	7911.05050.91	500	500	850	0.27
7911.06060.90	7911.06060.91	600	600	850	0.40
7911.06070.90	7911.06070.91	600	700	850	0.44
7911.07070.90	7911.07070.91	700	700	850	0.50

Drawer For Working Bench

CODE	DIMENSIONS			VOLUME (m³)
	L	W	H	
7999.37574.51	370	572	140	-

Doner Spit Mobile Bench

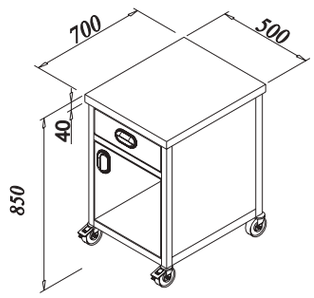

CODE	DIMENSIONS			VOLUME (m³)
	L	W	H	
7959.05070.00	500	700	850	0.41

Shelfs

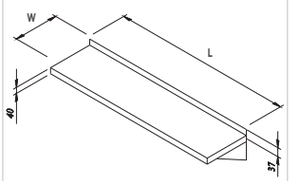

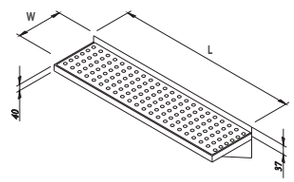

CODE		DIMENSIONS			VOLUME (m³)
WALL	DRANING	L	W	H	
7897.10030.30	7897.10030.31	1000	300	40	-
7897.12030.30	7897.12030.31	1200	300	40	-
7897.14030.30	7897.14030.31	1400	300	40	-
7897.16030.30	7897.16030.31	1600	300	40	-
7897.19030.30	7897.19030.31	1900	300	40	-

Electrical heated cupboard

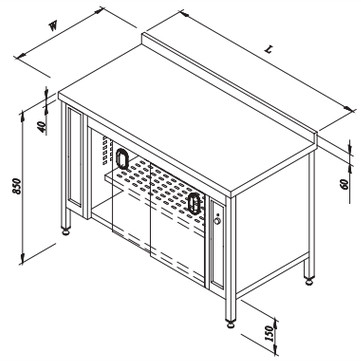

CODE		DIMENSIONS			POWER	TEMPERATURE	VOLTAGE	VOLUME (m³)
		L	W	H				
7868.12608.23		1200	600	850	1.5 kW	30-90°C	220 V - 240 V / 50 Hz	0.73
7868.14608.23		1400	600	850	1.5 kW	30-90°C	220 V - 240 V / 50 Hz	0.84
7868.16608.23		1600	600	850	3 kW	30-90°C	220 V - 240 V / 50 Hz	0.96
7868.19608.23		1900	600	850	3 kW	30-90°C	220 V - 240 V / 50 Hz	1.14
7868.12708.23		1200	700	850	1.5 kW	30-90°C	220 V - 240 V / 50 Hz	0.85
7868.14708.23		1400	700	850	1.5 kW	30-90°C	220 V - 240 V / 50 Hz	0.97
7868.16708.23		1600	700	850	3 kW	30-90°C	220 V - 240 V / 50 Hz	1.13
7868.19708.23		1900	700	850	3 kW	30-90°C	220 V - 240 V / 50 Hz	1.32

Wall Mounted Cupboard

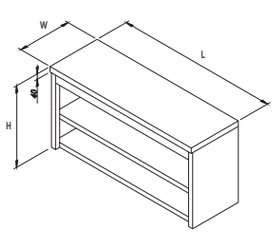

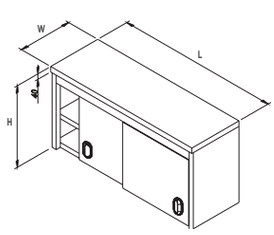

CODE		DIMENSIONS			VOLUME (m³)
WITHOUT DOOR	WITH DOOR	L	W	H	
7910.10040.01	7910.10040.00	1000	400	600	0.28
7910.12040.01	7910.12040.00	1200	400	600	0.36
7910.14040.01	7910.14040.00	1400	400	600	0.42
7910.16040.01	7910.16040.00	1600	400	600	0.48
7910.19040.01	7910.19040.00	1900	400	600	0.58

Underneath Cupboard

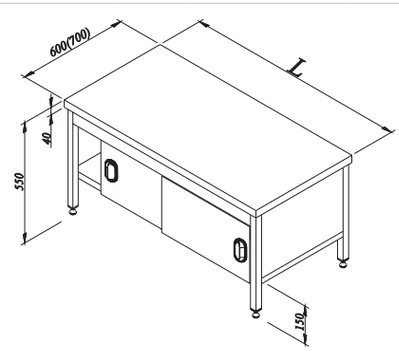

CODE	DIMENSIONS			VOLUME (m³)
	L	W	H	
7876.12060.00	1200	600	550	0.48
7876.14060.00	1400	600	550	0.56
7876.16060.00	1600	600	550	0.64
7876.19060.00	1900	600	550	0.76
7876.12070.00	1200	700	550	0.56
7876.14070.00	1400	700	550	0.65
7876.16070.00	1600	700	550	0.74
7876.19070.00	1900	700	550	0.87

Storage Rack

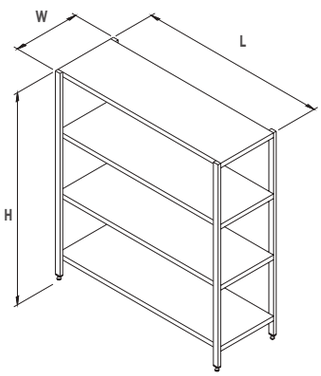

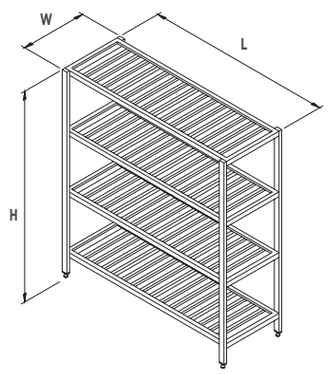

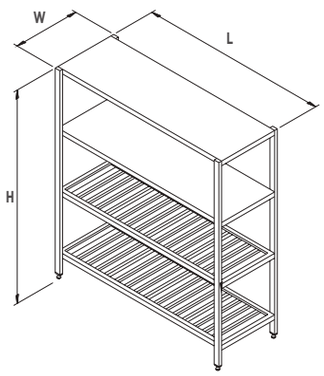

CODE			DIMENSIONS			VOLUME (m^3)
SHELF	WIRE SHELF	POT-PAN SHELF	L	W	H	
7897.09050.04	7897.09050.14	7897.09050.40	900	500	1550	0.83
7897.12050.04	7897.12050.14	7897.12050.40	1200	500	1550	1.10
7897.14050.04	7897.14050.14	7897.14050.40	1400	500	1550	1.27
7897.16050.04	7897.16050.14	7897.16050.40	1600	500	1550	1.65
7897.19050.04	7897.19050.14	7897.19050.40	1900	500	1550	1.71
7897.09060.04	7897.09060.14	7897.09060.40	900	600	1550	0.98
7897.12060.04	7897.12060.14	7897.12060.40	1200	600	1550	1.30
7897.14060.04	7897.14060.14	7897.14060.40	1400	600	1550	1.50
7897.16060.04	7897.16060.14	7897.16060.40	1600	600	1550	1.71
7897.19060.04	7897.19060.14	7897.19060.40	1900	600	1550	2.02
7897.09070.04	7897.09070.14	7897.09070.40	900	700	1550	1.14
7897.12070.04	7897.12070.14	7897.12070.40	1200	700	1550	1.50
7897.14070.04	7897.14070.14	7897.14070.40	1400	700	1550	1.75
7897.16070.04	7897.16070.14	7897.16070.40	1600	700	1550	1.98
7897.19070.04	7897.19070.14	7897.19070.40	1900	700	1550	2.34
7897.09080.04	7897.09080.14	7897.09080.40	900	800	1550	1.29
7897.12080.04	7897.12080.14	7897.12080.40	1200	800	1550	1.70
7897.14080.04	7897.14080.14	7897.14080.40	1400	800	1550	1.97
7897.16080.04	7897.16080.14	7897.16080.40	1600	800	1550	2.24
7897.19080.04	7897.19080.14	7897.19080.40	1900	800	1550	2.65

Island Type Hood

CODE		DIMENSIONS			VOLUME (m^3)
FILTER AND FRESH AIR SUPPLY	FLAME GUARD FILTER	L	W	H	
7885.15155.14	7885.15155.10	1500	1650	500	1.32
7885.20155.14	7885.20155.10	2000	1650	500	1.74
7885.25155.14	7885.25155.10	2500	1650	500	2.17
7885.30155.14	7885.30155.10	3000	1650	500	2.60
7885.35155.14	7885.35155.10	3500	1650	500	3.02
7885.40155.14	7885.40155.10	4000	1650	500	3.45
7885.45155.14	7885.45155.10	4500	1650	500	3.87
7885.50155.14	7885.50155.10	5000	1650	500	4.30
7885.55155.14	7885.55155.10	5500	1650	500	4.73
7885.60155.14	7885.60155.10	6000	1650	500	5.15
7885.25205.14	7885.25205.10	2500	2000	500	2.87
7885.30205.14	7885.30205.10	3000	2000	500	3.43
7885.35205.14	7885.35205.10	3500	2000	500	4.00
7885.40205.14	7885.40205.10	4000	2000	500	4.56
7885.45205.14	7885.45205.10	4500	2000	500	5.13
7885.50205.14	7885.50205.10	5000	2000	500	5.70
7885.55205.14	7885.55205.10	5500	2000	500	6.25
7885.60205.14	7885.60205.10	6000	2000	500	6.82
7885.25255.14	7885.25255.10	2500	2500	500	3.57
7885.30255.14	7885.30255.10	3000	2500	500	4.27
7885.35255.14	7885.35255.10	3500	2500	500	4.97
7885.40255.14	7885.40255.10	4000	2500	500	5.68
7885.45255.14	7885.45255.10	4500	2500	500	6.38
7885.50255.14	7885.50255.10	5000	2500	500	7.08
7885.55255.14	7885.55255.10	5500	2500	500	7.78
7885.60255.14	7885.60255.10	6000	2500	500	8.48

Island Type Hood Without Filter

CODE	DIMENSIONS			VOLUME (m^3)
	L	W	H	
7885.25155.00	2500	1650	500	2.17
7885.30155.00	3000	1650	500	2.60
7885.35155.00	3500	1650	500	3.02
7885.40155.00	4000	1650	500	3.45
7885.45155.00	4500	1650	500	3.87
7885.50155.00	5000	1650	500	4.30
7885.55155.00	5500	1650	500	4.73
7885.60155.00	6000	1650	500	5.15
7885.25205.00	2500	2000	500	2.87
7885.30205.00	3000	2000	500	3.43
7885.35205.00	3500	2000	500	4.00
7885.40205.00	4000	2000	500	4.56
7885.45205.00	4500	2000	500	5.13
7885.50205.00	5000	2000	500	5.70
7885.55205.00	5500	2000	500	6.25
7885.60205.00	6000	2000	500	6.82

Wall Mounted Hood Without Filter

CODE	DIMENSIONS			VOLUME (m^3)
	L	W	H	
7885.10105.01	1000	1000	500	0.60
7885.15105.01	1500	1000	500	0.90
7885.20105.01	2000	1000	500	1.18
7885.25105.01	2500	1000	500	1.47
7885.30105.01	3000	1000	500	1.76
7885.35105.01	3500	1000	500	2.05
7885.40105.01	4000	1000	500	2.33
7885.12125.01	1200	1200	500	0.85
7885.15125.01	1500	1200	500	1.06
7885.20125.01	2000	1200	500	1.40
7885.25125.01	2500	1200	500	1.75
7885.30125.01	3000	1200	500	2.10
7885.35125.01	3500	1200	500	2.44
7885.40125.01	4000	1200	500	2.78
7885.15155.01	1500	1500	500	1.32
7885.20155.01	2000	1500	500	1.74
7885.25155.01	2500	1500	500	2.17
7885.30155.01	3000	1500	500	2.60
7885.35155.01	3500	1500	500	3.02
7885.40155.01	4000	1500	500	3.45
7885.45155.01	4500	1500	500	3.87
7885.50155.01	5000	1500	500	4.30
7885.55155.01	5500	1500	500	4.73
7885.60155.01	6000	1500	500	5.15

Wall mounted hood

CODE		DIMENSIONS			VOLUME (m^3)
FILTER AND FRESH AIR SUPPLY	FLAME GUARD FILTER	L	W	H	
7885.15105.12	7885.15105.11	1500	1000	500	0.90
7885.20105.12	7885.20105.11	2000	1000	500	1.18
7885.25105.12	7885.25105.11	2500	1000	500	1.47
7885.30105.12	7885.30105.11	3000	1000	500	1.76
7885.35105.12	7885.35105.11	3500	1000	500	2.05
7885.40105.12	7885.40105.11	4000	1000	500	2.33
7885.15125.12	7885.15125.11	1500	1200	500	1.06
7885.20125.12	7885.20125.11	2000	1200	500	1.40
7885.25125.12	7885.25125.11	2500	1200	500	1.75
7885.30125.12	7885.30125.11	3000	1200	500	2.10
7885.35125.12	7885.35125.11	3500	1200	500	2.44
7885.40125.12	7885.40125.11	4000	1200	500	2.78
7885.15155.12	7885.15155.11	1500	1500	500	1.32
7885.20155.12	7885.20155.11	2000	1500	500	1.74
7885.25155.12	7885.25155.11	2500	1500	500	2.17
7885.30155.12	7885.30155.11	3000	1500	500	2.60
7885.35155.12	7885.35155.11	3500	1500	500	3.02
7885.40155.12	7885.40155.11	4000	1500	500	3.45
7885.45155.12	7885.45155.11	4500	1500	500	3.87
7885.50155.12	7885.50155.11	5000	1500	500	4.30
7885.55155.12	7885.55155.11	5500	1500	500	4.73
7885.60155.12	7885.60155.11	6000	1500	500	5.15

Hood Illumination – Drop-In Type

CODE		DIMENSIONS		POWER	VOLTAGE
		L	W		
7250.08020.20	⚡	740	210	2x18 W=36 W	220-240 V / 50 Hz
7250.13020.20	⚡	1340	210	2x36 W=72 W	220-240 V / 50 Hz

Grease trap

CODE	DIMENSIONS		
	L	W	W/P
7960.53347.02	520	300	470
7960.95610.02	950	610	1050

Side Drain Ø 50

OUTLET DIRECTION CODE					DIMENSIONS		OUTLET POSITION	PIPE DIAMETER	PIPE TYPE
BOTTOM	RIGHT	FRONT	LEFT	BAVK	L	W			
7960.02929.5Y1	7960.02929.5Y2	7960.02929.5Y3	7960.02929.5Y4	7960.02929.5Y5	290	290	SIDE	50 mm	Ø 50 PVC
7960.04929.5Y1	7960.04929.5Y2	7960.04929.5Y3	7960.04929.5Y4	7960.04929.5Y5	490	290	SIDE	50 mm	Ø 50 PVC
7960.07429.5Y1	7960.07429.5Y2	7960.07429.5Y3	7960.07429.5Y4	7960.07429.5Y5	740	290	SIDE	50 mm	Ø 50 PVC
7960.09429.5Y1	7960.09429.5Y2	7960.09429.5Y3	7960.09429.5Y4	7960.09429.5Y5	940	290	SIDE	50 mm	Ø 50 PVC
7960.11829.5Y1	7960.11829.5Y2	7960.11829.5Y3	7960.11829.5Y4	7960.11829.5Y5	1180	290	SIDE	50 mm	Ø 50 PVC
7960.16229.5Y1	7960.16229.5Y2	7960.16229.5Y3	7960.16229.5Y4	7960.16229.5Y5	1620	290	SIDE	50 mm	Ø 50 PVC
7960.20629.5Y1	7960.20629.5Y2	7960.20629.5Y3	7960.20629.5Y4	7960.20629.5Y5	2060	290	SIDE	50 mm	Ø 50 PVC
7961.02929.5Y1	7961.02929.5Y2	7961.02929.5Y3	7961.02929.5Y4	7961.02929.5Y5	290	290	SIDE	58 mm	Ø 50 PIK
7961.04929.5Y1	7961.04929.5Y2	7961.04929.5Y3	7961.04929.5Y4	7961.04929.5Y5	490	290	SIDE	58 mm	Ø 50 PIK
7961.07429.5Y1	7961.07429.5Y2	7961.07429.5Y3	7961.07429.5Y4	7961.07429.5Y5	740	290	SIDE	58 mm	Ø 50 PIK
7961.09429.5Y1	7961.09429.5Y2	7961.09429.5Y3	7961.09429.5Y4	7961.09429.5Y5	940	290	SIDE	58 mm	Ø 50 PIK
7961.11829.5Y1	7961.11829.5Y2	7961.11829.5Y3	7961.11829.5Y4	7961.11829.5Y5	1180	290	SIDE	58 mm	Ø 50 PIK
7961.16229.5Y1	7961.16229.5Y2	7961.16229.5Y3	7961.16229.5Y4	7961.16229.5Y5	1620	290	SIDE	58 mm	Ø 50 PIK
7961.20629.5Y1	7961.20629.5Y2	7961.20629.5Y3	7961.20629.5Y4	7961.20629.5Y5	2060	290	SIDE	58 mm	Ø 50 PIK

Side Drain Ø 70

OUTLET DIRECTION CODE					DIMENSIONS		OUTLET POSITION	PIPE DIAMETER	PIPE TYPE
BOTTOM	RIGHT	FRONT	LEFT	BAVK	L	W			
7960.02929.7Y1	7960.02929.7Y2	7960.02929.7Y3	7960.02929.7Y4	7960.02929.7Y5	290	290	SIDE	75 mm	Ø 70 PVC
7960.04929.7Y1	7960.04929.7Y2	7960.04929.7Y3	7960.04929.7Y4	7960.04929.7Y5	490	290	SIDE	75 mm	Ø 70 PVC
7960.07429.7Y1	7960.07429.7Y2	7960.07429.7Y3	7960.07429.7Y4	7960.07429.7Y5	740	290	SIDE	75 mm	Ø 70 PVC
7960.09429.7Y1	7960.09429.7Y2	7960.09429.7Y3	7960.09429.7Y4	7960.09429.7Y5	940	290	SIDE	75 mm	Ø 70 PVC
7960.11829.7Y1	7960.11829.7Y2	7960.11829.7Y3	7960.11829.7Y4	7960.11829.7Y5	1180	290	SIDE	75 mm	Ø 70 PVC
7960.16229.7Y1	7960.16229.7Y2	7960.16229.7Y3	7960.16229.7Y4	7960.16229.7Y5	1620	290	SIDE	75 mm	Ø 70 PVC
7960.20629.7Y1	7960.20629.7Y2	7960.20629.7Y3	7960.20629.7Y4	7960.20629.7Y5	2060	290	SIDE	75 mm	Ø 70 PVC
7961.02929.7Y1	7961.02929.7Y2	7961.02929.7Y3	7961.02929.7Y4	7961.02929.7Y5	290	290	SIDE	83 mm	Ø 70 PIK
7961.04929.7Y1	7961.04929.7Y2	7961.04929.7Y3	7961.04929.7Y4	7961.04929.7Y5	490	290	SIDE	83 mm	Ø 70 PIK
7961.07429.7Y1	7961.07429.7Y2	7961.07429.7Y3	7961.07429.7Y4	7961.07429.7Y5	740	290	SIDE	83 mm	Ø 70 PIK
7961.09429.7Y1	7961.09429.7Y2	7961.09429.7Y3	7961.09429.7Y4	7961.09429.7Y5	940	290	SIDE	83 mm	Ø 70 PIK
7961.11829.7Y1	7961.11829.7Y2	7961.11829.7Y3	7961.11829.7Y4	7961.11829.7Y5	1180	290	SIDE	83 mm	Ø 70 PIK
7961.16229.7Y1	7961.16229.7Y2	7961.16229.7Y3	7961.16229.7Y4	7961.16229.7Y5	1620	290	SIDE	83 mm	Ø 70 PIK
7961.20629.7Y1	7961.20629.7Y2	7961.20629.7Y3	7961.20629.7Y4	7961.20629.7Y5	2060	290	SIDE	83 mm	Ø 70 PIK

Side Drain Ø 100

OUTLET DIRECTION CODE					DIMENSIONS		OUTLET POSITION	PIPE DIAMETER	PIPE TYPE
BOTTOM	RIGHT	FRONT	LEFT	BAVK	L	W			
7960.02929.1Y1	7960.02929.1Y2	7960.02929.1Y3	7960.02929.1Y4	7960.02929.1Y5	290	290	SIDE	110 mm	Ø 100 PVC
7960.04929.1Y1	7960.04929.1Y2	7960.04929.1Y3	7960.04929.1Y4	7960.04929.1Y5	490	290	SIDE	110 mm	Ø 100 PVC
7960.07429.1Y1	7960.07429.1Y2	7960.07429.1Y3	7960.07429.1Y4	7960.07429.1Y5	740	290	SIDE	110 mm	Ø 100 PVC
7960.09429.1Y1	7960.09429.1Y2	7960.09429.1Y3	7960.09429.1Y4	7960.09429.1Y5	940	290	SIDE	110 mm	Ø 100 PVC
7960.11829.1Y1	7960.11829.1Y2	7960.11829.1Y3	7960.11829.1Y4	7960.11829.1Y5	1180	290	SIDE	110 mm	Ø 100 PVC
7960.16229.1Y1	7960.16229.1Y2	7960.16229.1Y3	7960.16229.1Y4	7960.16229.1Y5	1620	290	SIDE	110 mm	Ø 100 PVC
7960.20629.1Y1	7960.20629.1Y2	7960.20629.1Y3	7960.20629.1Y4	7960.20629.1Y5	2060	290	SIDE	110 mm	Ø 100 PVC
7961.02929.1Y1	7961.02929.1Y2	7961.02929.1Y3	7961.02929.1Y4	7961.02929.1Y5	290	290	SIDE	110 mm	Ø 100 PIK
7961.04929.1Y1	7961.04929.1Y2	7961.04929.1Y3	7961.04929.1Y4	7961.04929.1Y5	490	290	SIDE	110 mm	Ø 100 PIK
7961.07429.1Y1	7961.07429.1Y2	7961.07429.1Y3	7961.07429.1Y4	7961.07429.1Y5	740	290	SIDE	110 mm	Ø 100 PIK
7961.09429.1Y1	7961.09429.1Y2	7961.09429.1Y3	7961.09429.1Y4	7961.09429.1Y5	940	290	SIDE	110 mm	Ø 100 PIK
7961.11829.1Y1	7961.11829.1Y2	7961.11829.1Y3	7961.11829.1Y4	7961.11829.1Y5	1180	290	SIDE	110 mm	Ø 100 PIK
7961.16229.1Y1	7961.16229.1Y2	7961.16229.1Y3	7961.16229.1Y4	7961.16229.1Y5	1620	290	SIDE	110 mm	Ø 100 PIK
7961.20629.1Y1	7961.20629.1Y2	7961.20629.1Y3	7961.20629.1Y4	7961.20629.1Y5	2060	290	SIDE	110 mm	Ø 100 PIK

BASKI : 01.2025 / 2000 ADET

öztiryakiler

Factory / Headquarters
Öztiryakiler Madeni Eşya San. ve Tic. A.Ş.
Cumhuriyet Mah. Eski Hadımköy Yolu Cad.
No:834500Büyükçekmece-Istanbul/Türkiye
Phone: +90 (212) 886 78 10/11 pbx
Fax: +90 (212) 886 62 36

export@oztiryakiler.com.tr
www.ozti.com

SCAN THE QR CODE FOR
DIGITAL CATALOGUES

HELP US TO PROTECT
THE ENVIRONMENT BY
CHOOSING DIGITAL.

OZTIRYAKILER reserves the right to change technical details, prices and models without previous notice.
All design rights are reserved reproduction or copying of products and this catalogue, either full or in part is strictly forbidden without the prior permission of OZTIRYAKILER